## Contents


1 Subject of specification ..... 2
2 Scope of validity ..... 2
2.1 Deviations ..... 2
3 Hierarchy of documents. ..... 2
3.1 Definitions: ..... 2
4 Description ..... 2
5 Relevant documents ..... 3
6 Standards and regulations ..... 3
7 Enclosures ..... 3
8 Record of changes ..... 4

## 1 Subject of specification

This specification used in conjunction with other technical specifications of LOTOS Group S.A. establishes the minimum requirements for the typical design solutions for pipelines.

## 2 Scope of validity

This specification applies to the preparation of tender documents, inquiries and contracts concerning new investments and modernization projects planned by LOTOS Group S.A.

It shall also be a basis for preparing both detailed specifications and inquiries for individual or package unit supplies.

### 2.1 Deviations

Any deviation from this specification and the relevant specifications, standards and related documents including proposals, which the bidder claims to be economically and / or technically superior solutions must be submitted in writing for review and approval by Grupa LOTOS SA. Non-approved exceptions are not acceptable by Grupa Lotos S.A.

The supplier must report in writing any ambiguity in this or any other specifications of Grupa LOTOS SA or non-compliance with the referred documents / standards and obtain a written explanation from Grupa Lotos SA.

## 3 Hierarchy of documents.

In case of conflicts exististing between this specification and other documents, the following order of precedence shall govern:

- The current Polish legislation
- Terms of purchase order / contract and other requirements agreed in writing with GLSA
- Data Sheets approved by GL SA
- This specification
- Other Specifications
- Drawings and other documents
- Standards,

### 3.1 Definitions:

Shall – Indicate a mandatory requirement

GL SA – Grupa Lotos S.A.

KiA – Control System and Instrumentation

## 4 Description

This specification contains installation standards which have been prepared for use by LOTOS Group and which shall be applicable for preparing the designs of new or modernised installations in the refinery's premises.

## 5 Relevant documents

Any "Technical Specification" issued by GRUPA LOTOS S.A. listed in Contract Files.

## 6 Standards and regulations

- As mentioned in point No. 3 "Hierarchy of documents".

## 7 Enclosures

- ENCLOSURE NO.1 – Dewatering Steam Lines
- ENCLOSURE NO. 2 - Steam Tracing, Design and Technical Notes
- ENCLOSURE NO. 3 - Steam Tracing Steam Header, horizontal Steam Supply from Below
- ENCLOSURE NO. 4 - Steam Tracing Steam Header, horizontal Steam Supply from Above
- ENCLOSURE NO. 5 – Steam Tracing Steam Header, vertical, single Steam Supply from Below
- ENCLOSURE NO. 6 – Steam Tracing Steam Header, vertical, single Steam Supply from Above
- ENCLOSURE NO. 7 - Steam Tracing Steam Header, vertical, double Steam Supply from Below
- ENCLOSURE NO. 8 - Steam Tracing Steam Header, vertical, double Steam Supply from Above
- ENCLOSURE NO. 9 - Condensate Manifold, horizontal Condensate Outlet Downwards.
- ENCLOSURE NO. 10 - Condensate Manifold, horizontal Condensate Outlet Upwards
- ENCLOSURE NO. 11 – Condensate Manifold, vertical, single Condensate Outlet Downwards
- ENCLOSURE NO. 12 – Condensate Manifold, vertical, single Condensate Outlet Upwards
- ENCLOSURE NO. 13 - Condensate Manifold, vertical, double Condensate Outlet Downwards
- ENCLOSURE NO. 14 - Condensate Manifold, vertical, double Condensate Outlet Upwards
- ENCLOSURE NO. 15 - System Sketch for Steam Tracing
- ENCLOSURE NO. 16 - Execution of Hot Oil Heat Tracing
- ENCLOSURE NO. 17 - Utility Station
- ENCLOSURE NO. 18 - Typical Arrangement of Pump Piping
- ENCLOSURE NO 18a – Flange Alignment.
- ENCLOSURE NO. 19 - Typical Arrangement of Air Cooler Piping
- ENCLOSURE NO. 20 - Typical Arrangement of Control Valve Piping
- ENCLOSURE NO. 21 - Drains and Vents
- ENCLOSURE NO. 22 - Small Piping

- ENCLOSURE NO. 23 - Pressure and Temperature Measurement Nozzles
- ENCLOSURE NO. 24 – Level Measurement Nozzles for Vessels and Tanks
- ENCLOSURE NO. 25 – Installation of Flow Measurement Instruments
- ENCLOSURE NO. 26 - Installation of Restriction Orifices
- ENCLOSURE NO. 27 – Connections for corrosion-metering probes and sampling taps
- ENCLOSURE NO. 28 – Connection at Battery Limit
- ENCLOSURE NO. 29 – Fixed Utility Connection to Piping or Equipment
- ENCLOSURE NO. 30 – Cooling Water Supply Connection

## 8 Record of changes

| No. | Date | Description | Introduced by |
|---|---|---|---|
| 1 | | This specification entirely replaces the former LOTOS Group S.A. standard No. PR 07 202 with the same title. | B. Kowalewski |
| 2 | 09-05-2011 (rev.1) | Changes: enclosure 21 (point 1), enclosure 23 (point 1 and 2), enclosure 27 (point 3), enclosure 25 (point 2) | S. Zajączkowski |
| 3 | 30-11-2013 (rev.2) | Review, update, standardize and changes to the Standard within scope of order No. OK/990/2012 | Editorial board coordinated by T.Wróbel |
| - | 31-08-2015 | Page layout corrections, no contents changes. | T. Wróbel |

## 1. Dewatering Steam Lines

Steam lines must be dewatered:

- before each charge of direction in the piping run upwards,
- at each pipe end,
- before inlet into a steam turbine,
- before inlet into a control valve,
- at intervals of maximum 100 m,

## 2. Dewatering, Execution Examples

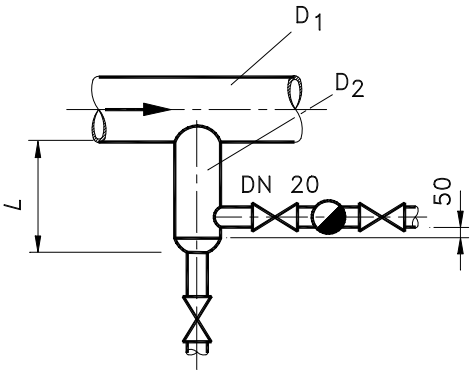


Figure 1: Dewater on pipe racks

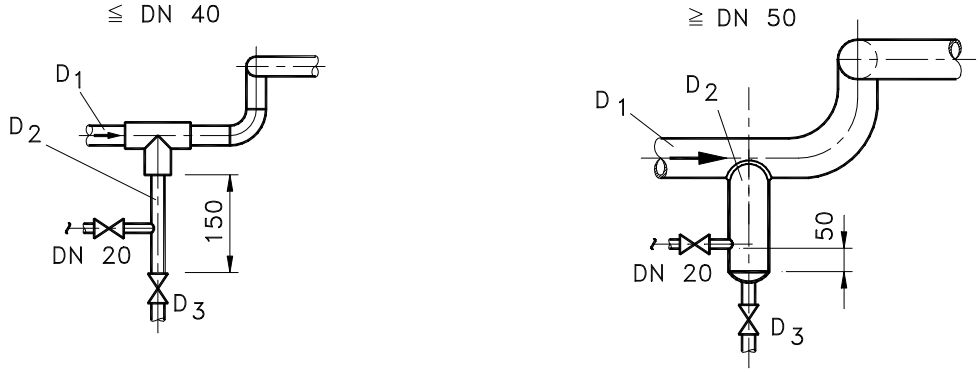


Figure 2: Dewatering of an expansion bend

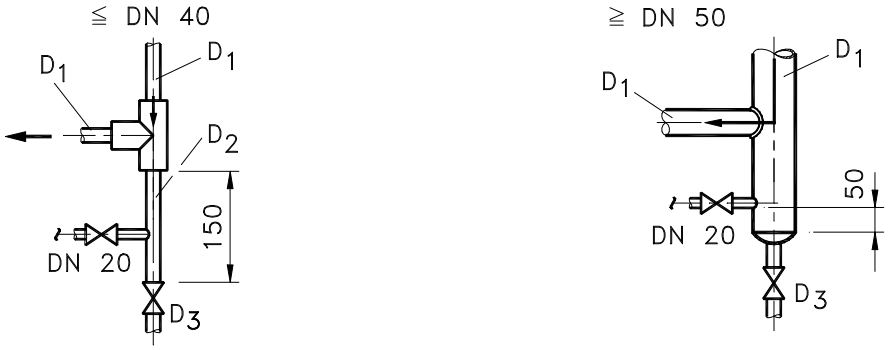


Figure 3: Dewatering of vertical steam lines

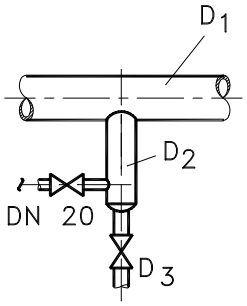


Figure 4: Dewatering of horizontal steam lines

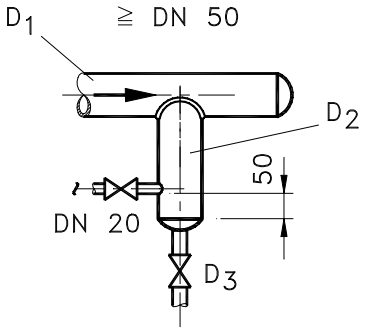


Figure 5: Dewatering of pipe ends

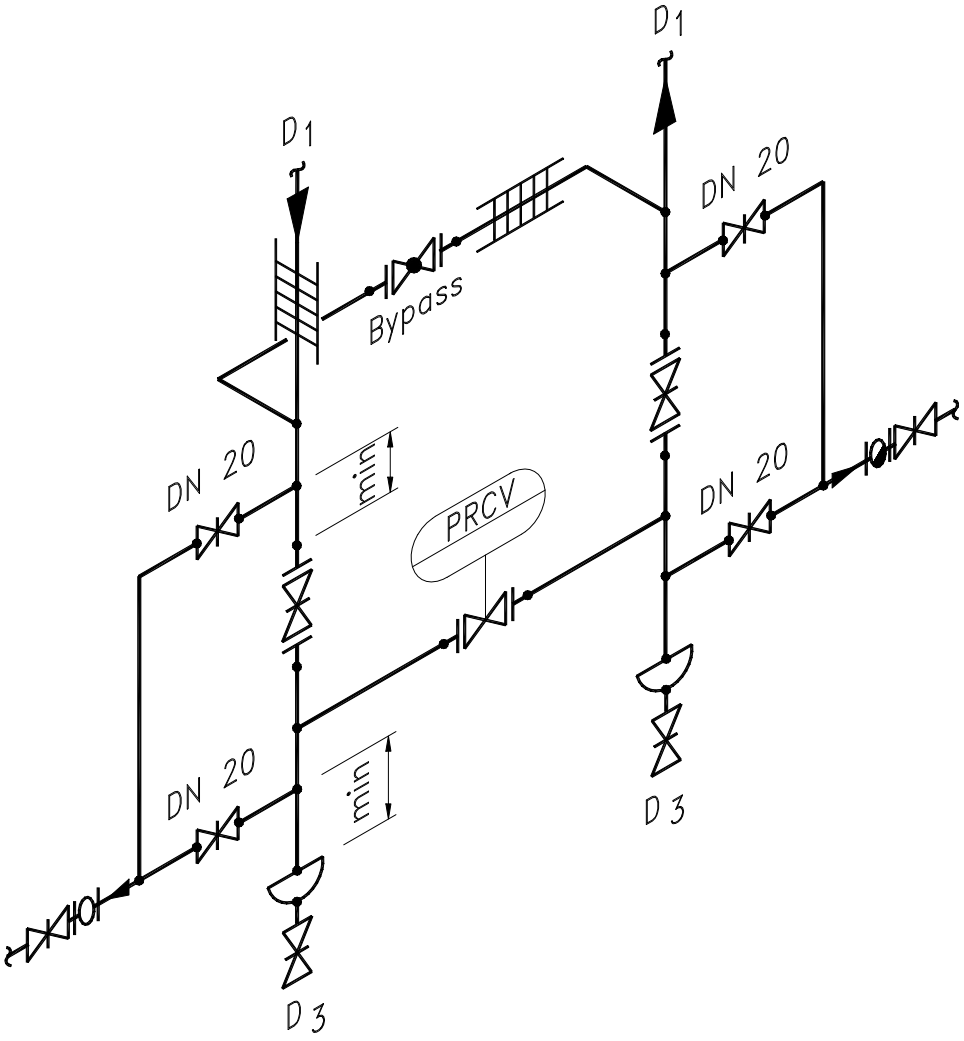


Figure 6: Dewatering of a steam control station

Table 1: Dimensions and Nominal Sizes

| | | | | | | | | | | | | | | |
|---|---|---|---|---|---|---|---|---|---|---|---|---|---|---|
| $D_1$ | DN 25 | DN 40 | DN 50 | DN 80 | DN 100 | DN 150 | DN 200 | DN 250 | DN 300 | DN 350 | DN 400 | DN 450 | DN 500 | DN 600 |
| | NPS 1 | NPS 1 1/2 | NPS 2 | NPS 3 | NPS 4 | NPS 6 | NPS 8 | NPS 10 | NPS 12 | NPS 14 | NPS 16 | NPS 18 | NPS 20 | NPS 24 |
| $D_2$ | DN 25 | DN 40 | DN 50 | DN 80 | DN 80 | DN 100 | DN 150 | DN 150 | DN 200 | DN 200 | DN 200 | DN 250 | DN 250 | DN 250 |
| | NPS 1 | NPS 1 1/2 | NPS 2 | NPS 3 | NPS 3 | NPS 4 | NPS 6 | NPS 6 | NPS 8 | NPS 8 | NPS 8 | NPS 10 | NPS 10 | NPS 10 |
| *L* mm | 250 | 250 | 320 | 320 | 320 | 320 | 320 | 320 | 350 | 400 | 400 | 500 | 500 | 500 |
| $D_3$ | DN 25 | DN 40 | DN 25 | DN 25 | DN 40 | DN 40 | DN 40 | DN 40 | DN 40 | DN 40 | DN 40 | DN 40 | DN 40 | DN 40 |
| | NPS 1 | NPS 1 1/2 | NPS 1 | NPS 1 | NPS 1 1/2 | NPS 1 1/2 | NPS 1 1/2 | NPS 1 1/2 | NPS 1 1/2 | NPS 1 1/2 | NPS 1 1/2 | NPS 1 1/2 | NPS 1 1/2 | NPS 1 1/2 |

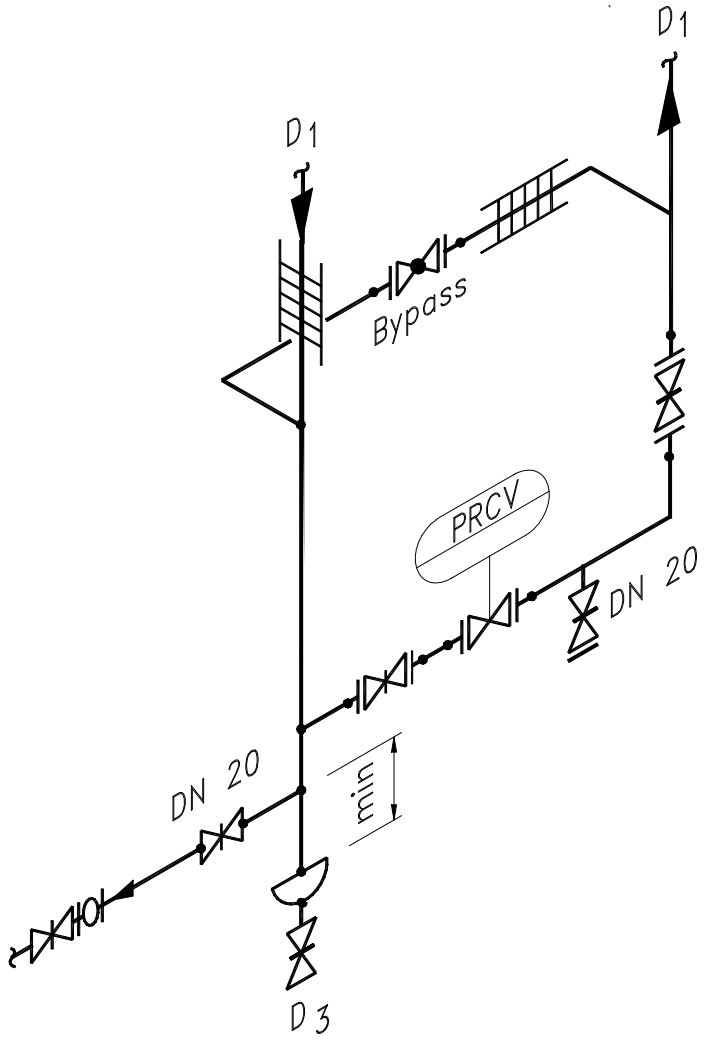


Figure 7: Dewatering of control station of a steam LS

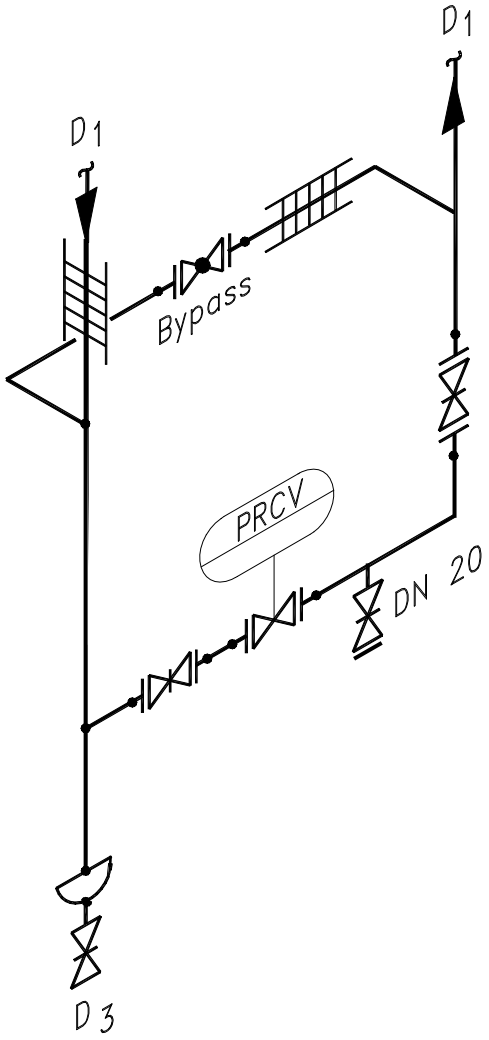


Figure 8: Dewatering of control station of a steam MS

| Grupa LOTOS S.A. | **ENCLOSURE No. 2** | Spec. No. 2020 |
|---|---|---|
| | **Steam Tracing Design and Technical Notes** | |

## 1. General Requirements

- Steam at various working pressures dependent on the temperature of the fluid is to be used for tracers.
- The steam condensate is to be routed to condensate manifolds. Various condensate systems are going to be design, dependent on the working pressure of the steam supply system.
- All heating process lines are to be identified in the P&I diagrams. When piping is identified in the P&I diagrams for trace heating, all valves, fittings, special components, vents, instruments and servicing pipe lines associated with the identified piping are also to be trace heated.
- For steam tracing condensate pockets shall be avoided. The steam tracing line shall be continuous from the steam header to the condensate drain without: vents, drains or dead ends.
- For each branch of steam tracing separate steam trap and stem condensate piping connection to condensate manifold shall be provide.
- For several steam tracing pipes servicing on one heated pipe each tracer is to be connected separately by a block valve to the steam header and condensate manifold.
- In the case of fluids tending to become viscous the contact points of the pipe supports at the piping must be heated to avoid cold bridges.
- In the case of level indicators with magnetic transmission the tracer shall be of CrNi steel.
- The tracers between steam header and the piping to be steam traced shall be laid in bundles, if possible.

## 2. Drawing Representation

- The route of the tracers on piping shall be represented symbolically in an isometric drawings.
- Steam headers and condensate manifolds shall be shown in the isometric drawings and will be provided with a piping tags.
- The individual incoming and outgoing tracers shall be identified and tagged on the steam headers and condensate manifolds..
- The location of the individual steam headers is to be shown in the arrangement drawing for the unit.

## 3. Steam Headers and Condensate Manifolds

- Steam headers and condensate manifolds shall be arranged in such a way that an operable arrangement of all block valves is obtained.
- Each steam header will be provided with two spare (reserve) nozzles designed as follows:

  - in the case of flanged valves as nozzle with blank flange
  - in the case of welding connection neck valve as nozzle with valve welded in

- Steam headers and condensate manifolds are preferably to be arranged vertical for space reasons and horizontal arrangement is only allowed in special instances.
- Steam headers and condensate manifolds may not hinder access to and maintenance of units.
- Tracing points arranged more than 6 m above the steam line are to be provided with a steam header above these tracing points and the tracer is to be laid from there at an incline.

- The block valve of the steam supply line to the steam header shall be arranged as near the steam line as possible.
- The block valve of the condensate drain line from the condensate manifold is to be arranged as near the condensate line as possible.
- Steam headers and condensate manifolds are to be arranged as low as possible. The dimension of 200 mm is to be observed as the minimum distance from grade.
- It is recommended to use shop made manifolds for steam tracing and condensate collection. Fittings and accessories shall be connecting to manifolds by flanges.
- The design of the steam headers is stipulated in enclosures 3÷8.
- The design of the condensate manifolds is stipulated in enclosures 9÷14.

## 4. Design of the Steam Tracing

Calculating the heat flows of the tracers, selection the nominal diameter and the number of tracers in a trace heating system, laying out the maximum allowed total length of the individual tracer lengths and the arrangement and fastening of the tracers to the piping to be heated is to be stipulated in detailed elaboration for each project design of steam tracing..

## 5. Tracers laid with Spacing

Tracers, which should be laid around the pipeline at a certain distance from the traced pipe wall, shall be marked on the diagram. This is important for a medium like caustic soda and a medium, which may become locally overheated and start boiling.

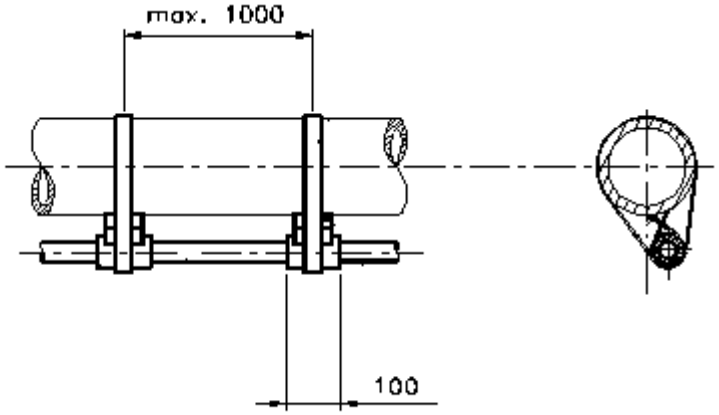


Figure 1: An example of tracers laid with spacing

| Grupa LOTOS S.A. | **ENCLOSURE No. 3** | Spec. No. 2020 |
|---|---|---|
| | **Steam Tracing<br>Steam Header, horizontal<br>Steam Supply from Below** | |

This standard applies for the design of steam tracing headers.

.

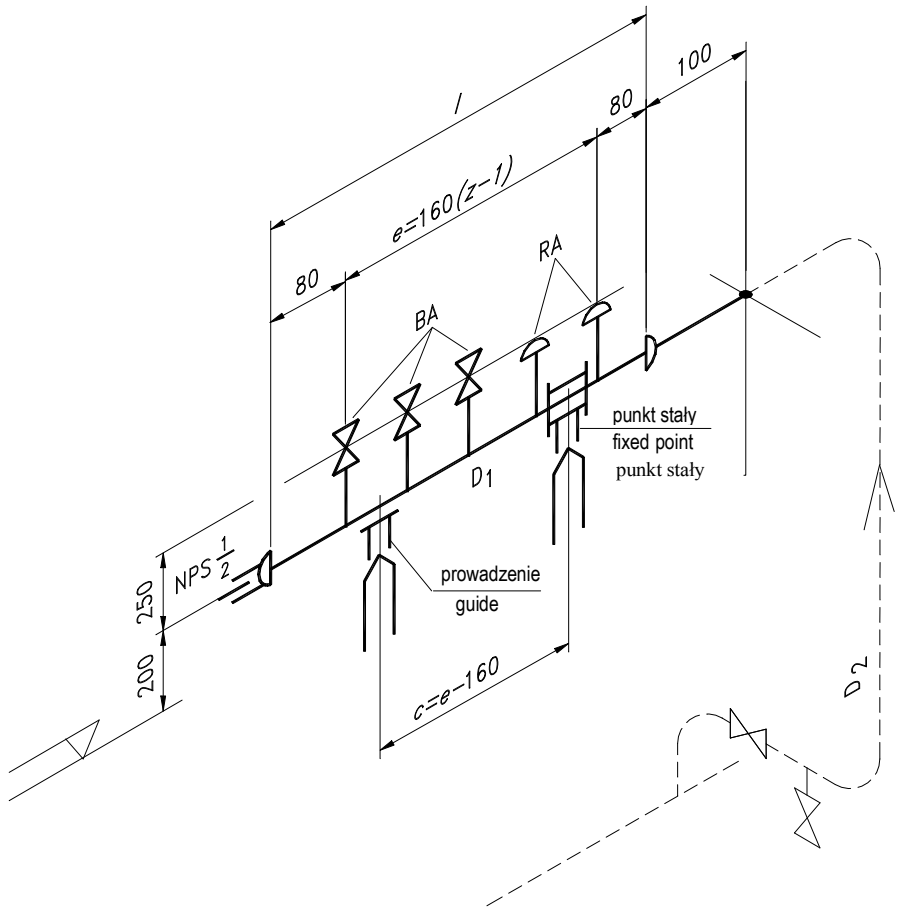


Figure 1: Steam header, schematic representation

**Remark:**

Spacing e= 160(z-1) mm between steam tracing lines is valid for a maximum valve hand lever diameter of 100 mm.

The arrangement of the operating side is shown on the associated isometric drawing.

| Grupa LOTOS S.A. | **ENCLOSURE No. 4** | Spec. No. 2020 |
|---|---|---|
| | **Steam Tracing<br>Steam Header, horizontal<br>Steam Supply from Above** | |

This standard applies for the design of steam tracing headers.

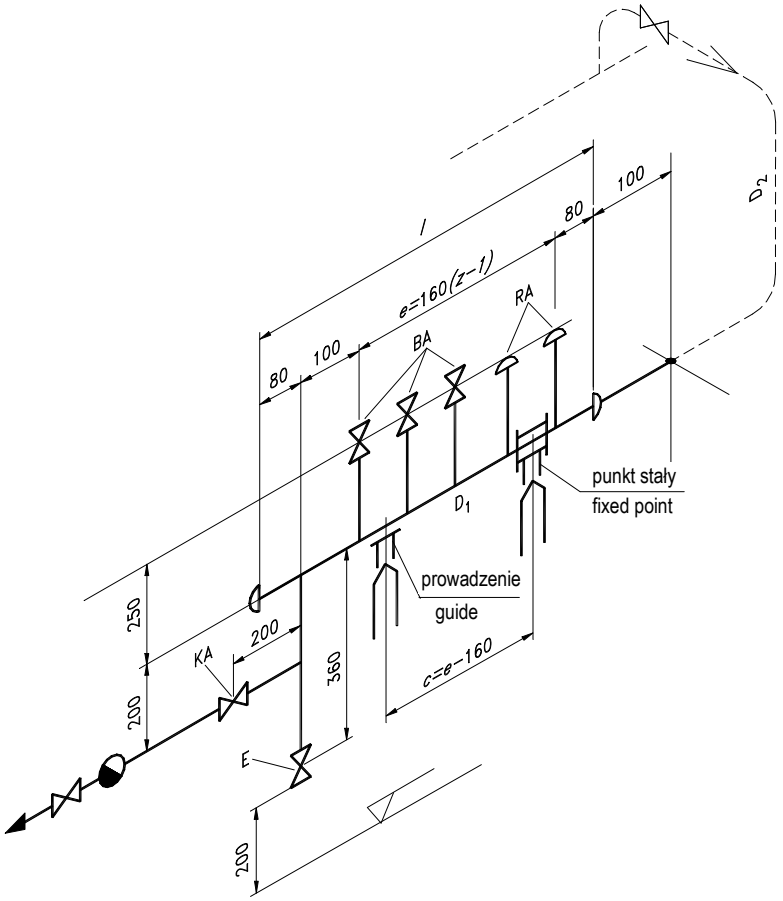


Figure 1: Steam header, schematic representation

**Remark:**

Spacing e= 160(z-1) mm between steam tracing lines is valid for a maximum valve hand lever diameter of 100 mm.

The arrangement of the operating side is shown on the associated isometric drawing.

| Arch. No.. | Area | Sub-area | Document number | Rev. No.. | Issue date | Page | Pages |
|---|---|---|---|---|---|---|---|
| **19255** | **90** | **00** | **PR 30002** | **2** | **30-11-2013** | **1** | **1** |

| Grupa LOTOS S.A. | **ENCLOSURE No. 5** | Spec. No. 2020 |
|---|---|---|
| | **Steam Tracing<br>Steam Header, vertical, single<br>Steam Supply from Below** | |

This standard applies for the design of steam tracing headers.

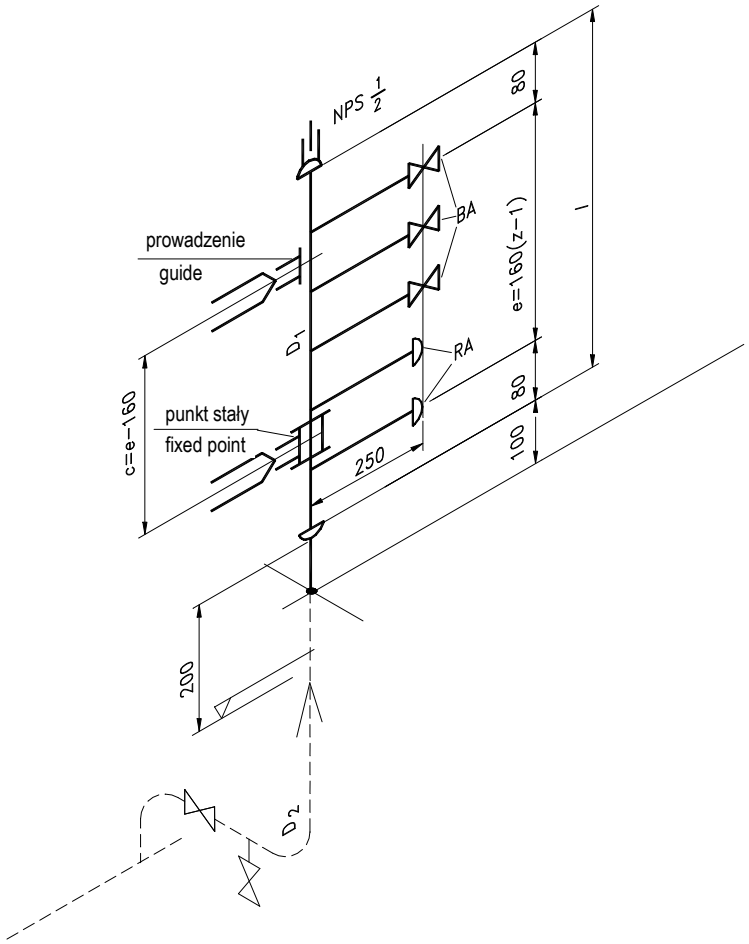


Figure 1: Steam header, schematic representation

**Remark:**

Spacing e= 160(z-1) mm between steam tracing lines is valid for a maximum valve hand lever diameter of 100 mm.

The arrangement of the operating side is shown on the associated isometric drawing.

| Grupa LOTOS S.A. | **ENCLOSURE No. 6** | Spec. No. 2020 |
|---|---|---|
| | **Steam Tracing<br>Steam Header, vertical, single<br>Steam Supply from Above** | |

This standard applies for the design of steam tracing headers.

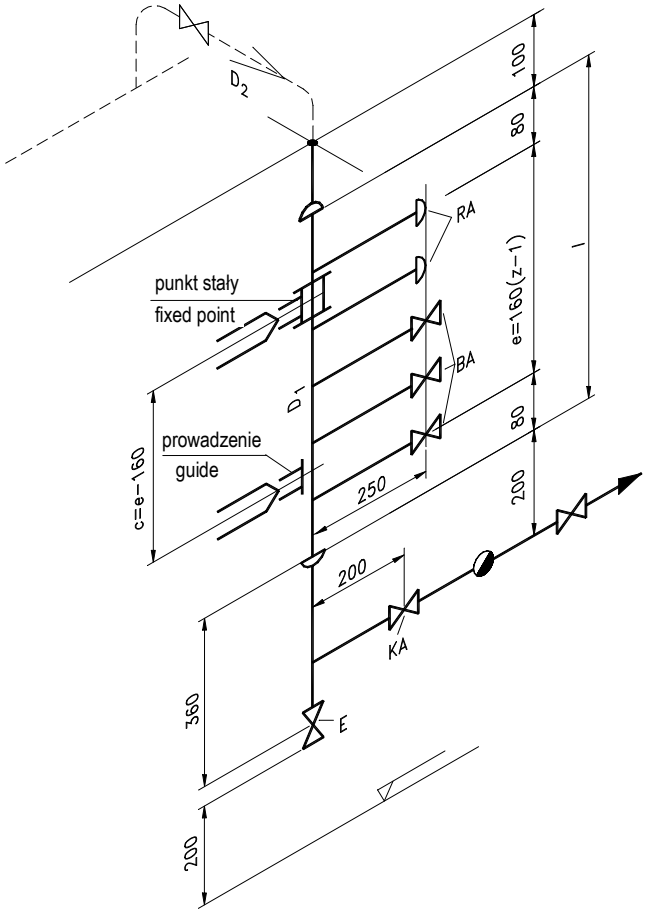


Figure 1: Steam header, schematic representation

**Remark:**

Spacing e= 160(z-1) mm between steam tracing lines is valid for a maximum valve hand lever diameter of 100 mm.

The arrangement of the operating side is shown on the associated isometric drawing.

| Arch. No.. | Area | Sub-area | Document number | Rev. No.. | Issue date | Page | Pages |
|---|---|---|---|---|---|---|---|
| **19255** | **90** | **00** | **PR 30002** | **2** | **30-11-2013** | **1** | **1** |

| Grupa LOTOS S.A. | **ENCLOSURE No. 7** | Spec. No. 2020 |
|---|---|---|
| | **Steam Tracing<br>Steam Header, vertical, double<br>Steam Supply from Below** | |

This standard applies for the design of steam tracing headers.

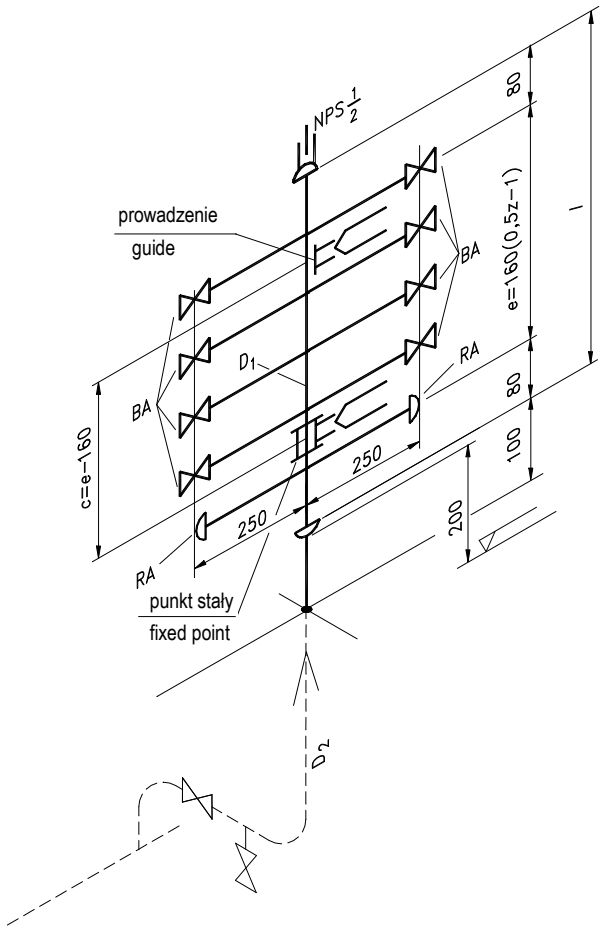


Figure 1: Steam header, schematic representation

**Remark:**

Spacing e= 160(z-1) mm between steam tracing lines is valid for a maximum valve hand lever diameter of 100 mm.

The arrangement of the operating side is shown on the associated isometric drawing.

| Arch. No.. | Area | Sub-area | Document number | Rev. No.. | Issue date | Page | Pages |
|---|---|---|---|---|---|---|---|
| **19255** | **90** | **00** | **PR 30002** | **2** | **30-11-2013** | **1** | **1** |

| Grupa LOTOS S.A. | **ENCLOSURE No. 8** | Spec. No. 2020 |
|---|---|---|
| | **Steam Tracing<br>Steam Header, vertical, double<br>Steam Supply from Above** | |

This standard applies for the design of steam tracing headers.

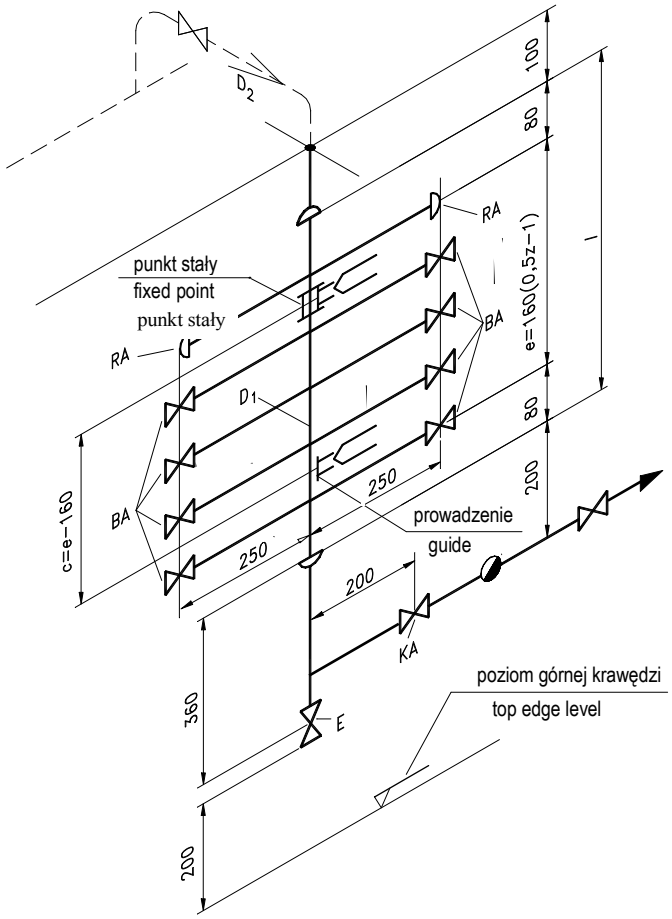


Figure 1: Steam header, schematic representation

**Remark:**

Spacing e= 160(z-1) mm between steam tracing lines is valid for a maximum valve hand lever diameter of 100 mm.

The arrangement of the operating side is shown on the associated isometric drawing.

| Arch. No.. | Area | Sub-area | Document number | Rev. No.. | Issue date | Page | Pages |
|---|---|---|---|---|---|---|---|
| **19255** | **90** | **00** | **PR 30002** | **2** | **30-11-2013** | **1** | **1** |

| Grupa LOTOS S.A. | **ENCLOSURE No. 9** | Spec. No. 2020 |
|---|---|---|
| | **Condensate Manifold, horizontal Condensate Outlet Downwards** | |

This standard applies for the design of condensate manifolds.

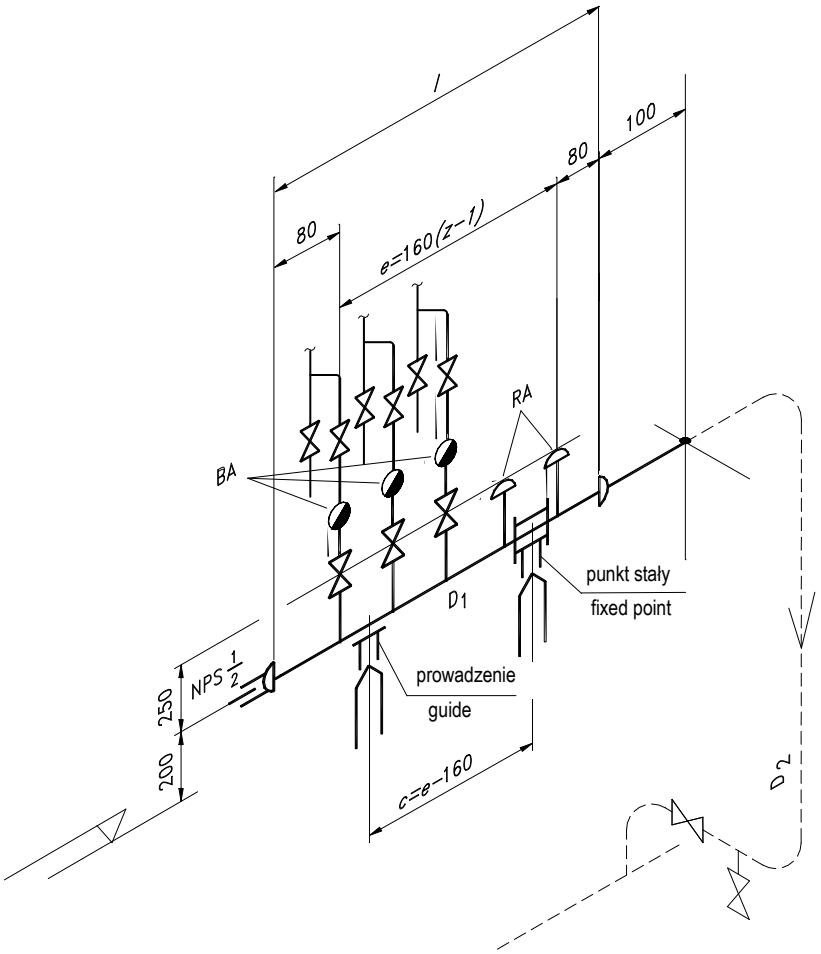


Figure 1: Condensate manifold, schematic representation

**Remark:**

Spacing e= 160(z-1) mm between steam tracing lines is valid for a maximum valve hand lever diameter of 100 mm.

The arrangement of the operating side is shown on the associated isometric drawing.

| Arch. No.. | Area | Sub-area | Document number | Rev. No.. | Issue date | Page | Pages |
|---|---|---|---|---|---|---|---|
| **19255** | **90** | **00** | **PR 30002** | **2** | **30-11-2013** | **1** | **1** |

| Grupa LOTOS S.A. | **ENCLOSURE No. 10** | Spec. No. 2020 |
|---|---|---|
| | **Condensate Manifold, horizontal Condensate Outlet Upwards** | |

This standard applies for the design of condensate manifolds.

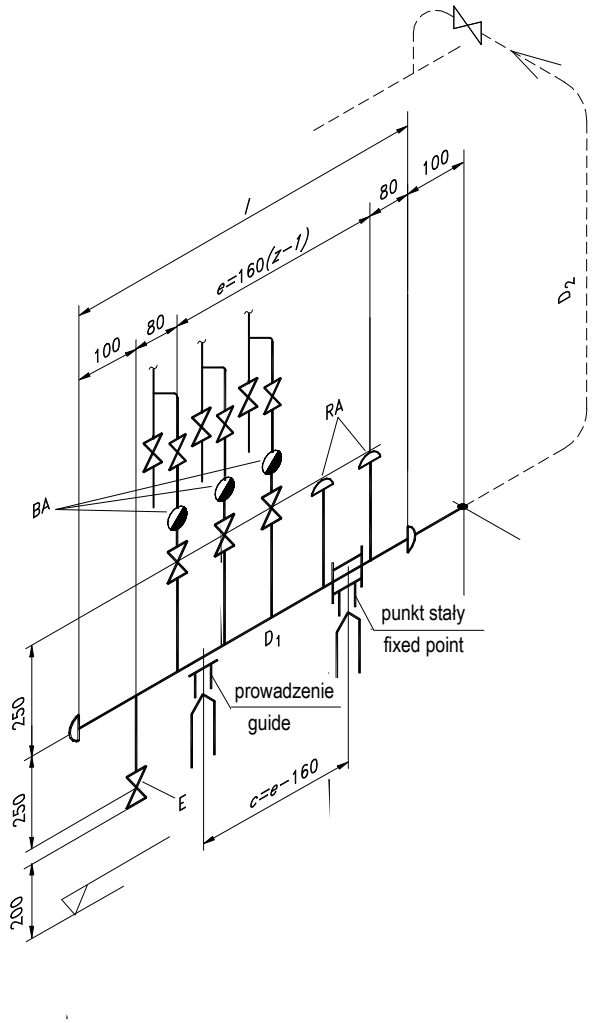


Figure 1: Condensate manifold, schematic representation

**Remark:**

Spacing e= 160(z-1) mm between steam tracing lines is valid for a maximum valve hand lever diameter of 100 mm.

The arrangement of the operating side is shown on the associated isometric drawing.

| Grupa LOTOS S.A. | **ENCLOSURE No. 11** | Spec. No. 2020 |
|---|---|---|
| | **Condensate Manifold, vertical, single Condensate Outlet Downwards** | |

This standard applies for the design of condensate manifolds.

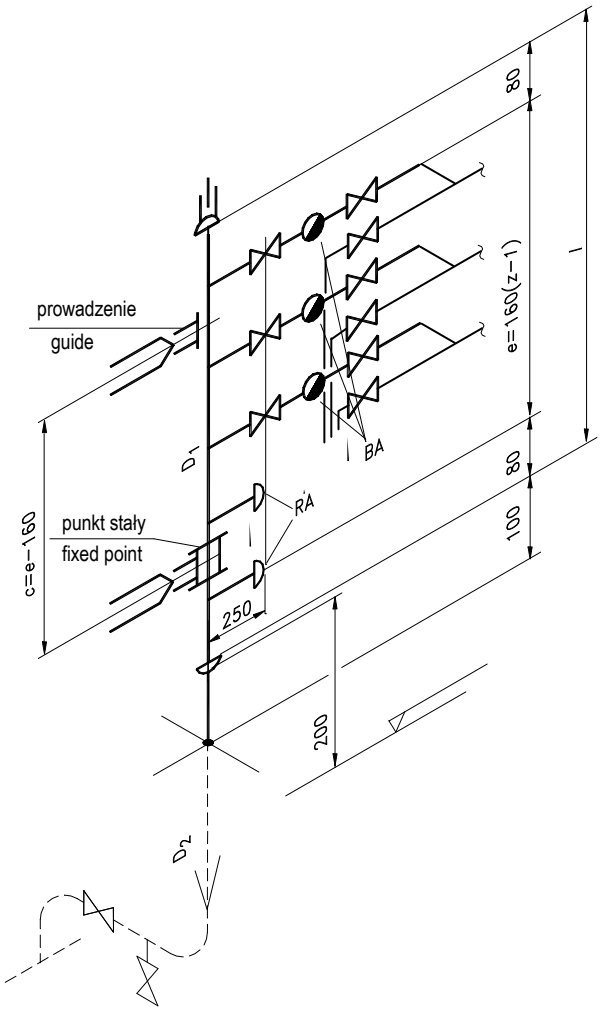


Figure 1: Condensate manifold, schematic representation

**Remark:**

Spacing e= 160(z-1) mm between steam tracing lines is valid for a maximum valve hand lever diameter of 100 mm.

The arrangement of the operating side is shown on the associated isometric drawing.

| Grupa LOTOS S.A. | **ENCLOSURE No. 12** | Spec. No. 2020 |
|---|---|---|
| | **Condensate Manifold, vertical, single Condensate Outlet Upwards** | |

This standard applies for the design of condensate manifolds.

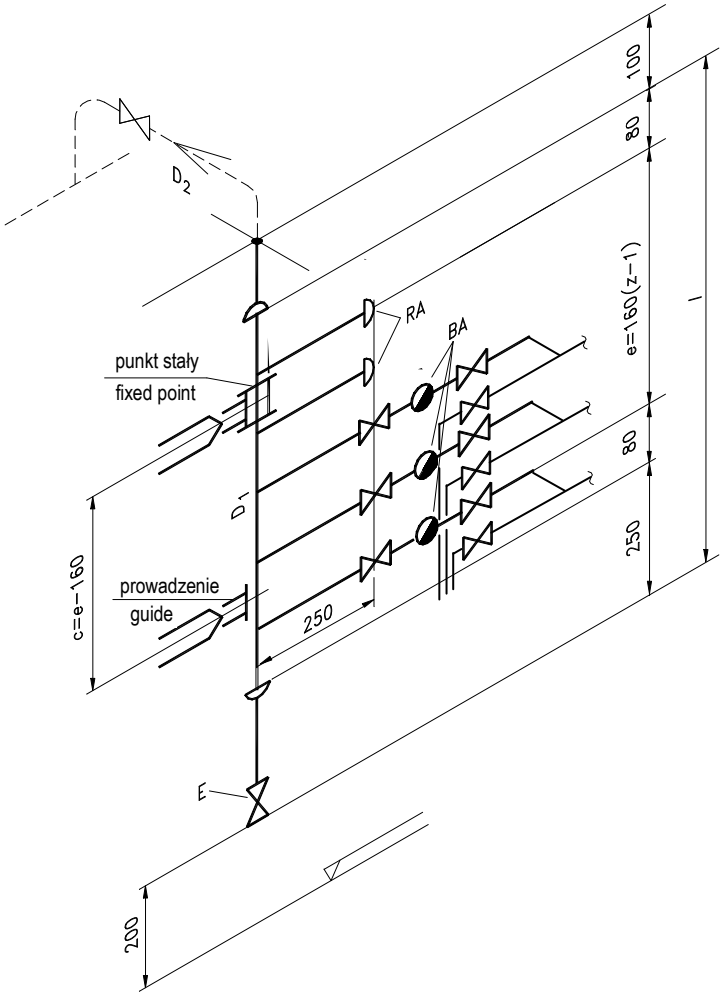


Figure 1: Condensate manifold, schematic representation.

**Remark:**

Spacing e= 160(z-1) mm between steam tracing lines is valid for a maximum valve hand lever diameter of 100 mm.

The arrangement of the operating side is shown on the associated isometric drawing.

| Arch. No.. | Area | Sub-area | Document number | Rev. No.. | Issue date | Page | Pages |
|---|---|---|---|---|---|---|---|
| **19255** | **90** | **00** | **PR 30002** | **2** | **30-11-2013** | **1** | **1** |

| Grupa LOTOS S.A. | **ENCLOSURE No. 13** | Spec. No. 2020 |
|---|---|---|
| | **Condensate Manifold, vertical, double Condensate Outlet Downwards** | |

This standard applies for the design of condensate manifolds.

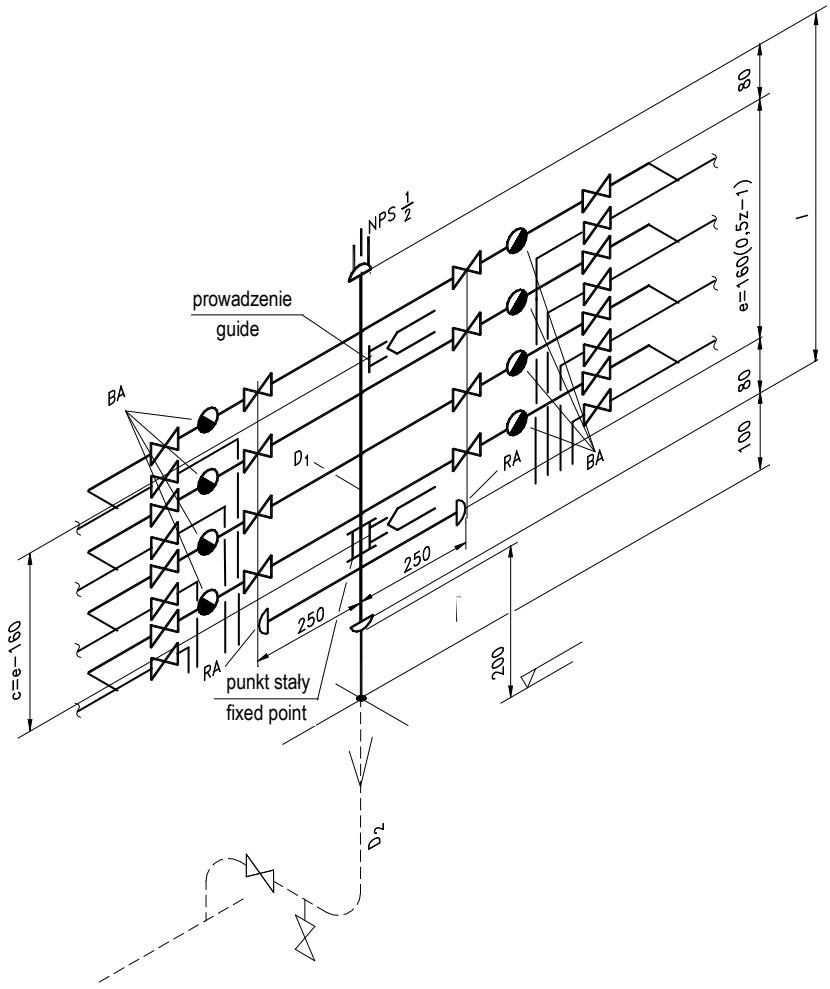


Figure 1: Condensate manifold, schematic representation

**Remark:**

Spacing e= 160(z-1) mm between steam tracing lines is valid for a maximum valve hand lever diameter of 100 mm.

The arrangement of the operating side is shown on the associated isometric drawing.

| Arch. No.. | Area | Sub-area | Document number | Rev. No.. | Issue date | Page | Pages |
|---|---|---|---|---|---|---|---|
| **19255** | **90** | **00** | **PR 30002** | **2** | **30-11-2013** | **1** | **1** |

| Grupa LOTOS S.A. | **ENCLOSURE No. 14** | Spec. No. 2020 |
|---|---|---|
| | **Condensate Manifold, vertical, double Condensate Outlet Upwards** | |

This standard applies for the design of condensate manifolds.

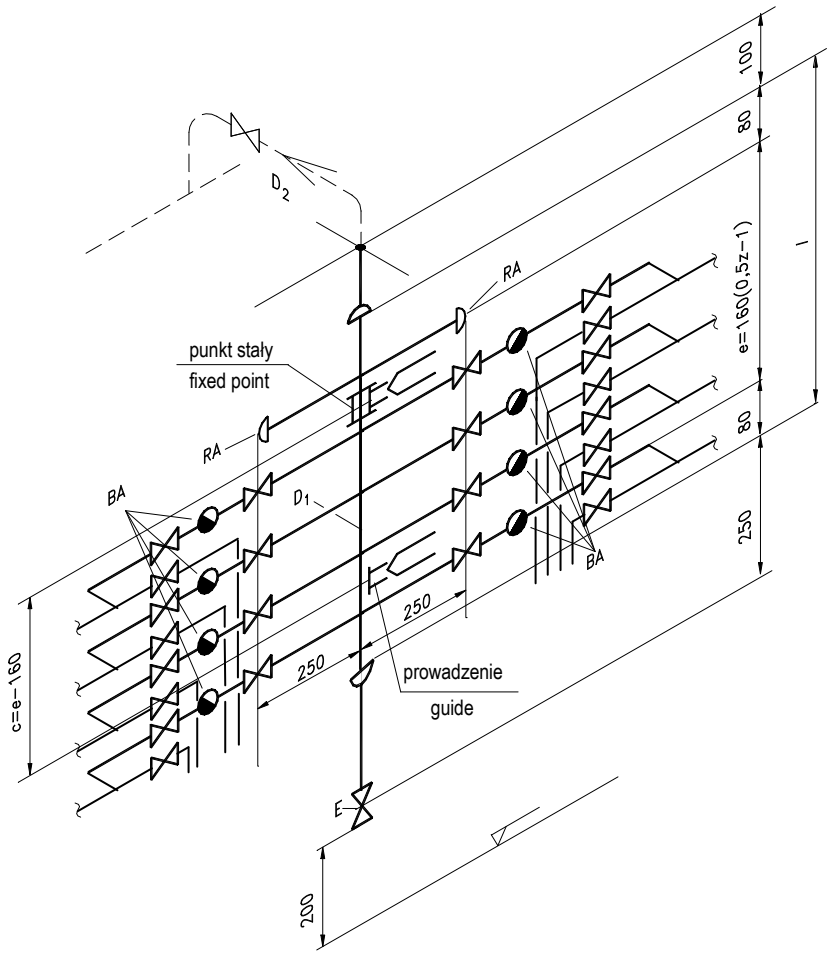


Figure 1: Condensate manifold, schematic representation

**Remark:**

Spacing e= 160(z-1) mm between steam tracing lines is valid for a maximum valve hand lever diameter of 100 mm.

The arrangement of the operating side is shown on the associated isometric drawing.

| Arch. No.. | Area | Sub-area | Document number | Rev. No.. | Issue date | Page | Pages |
|---|---|---|---|---|---|---|---|
| **19255** | **90** | **00** | **PR 30002** | **2** | **30-11-2013** | **1** | **1** |

| Grupa LOTOS S.A. | **ENCLOSURE No. 15** | Spec. No. 2020 |
|---|---|---|
| | **System Sketch for Steam Tracing** | |

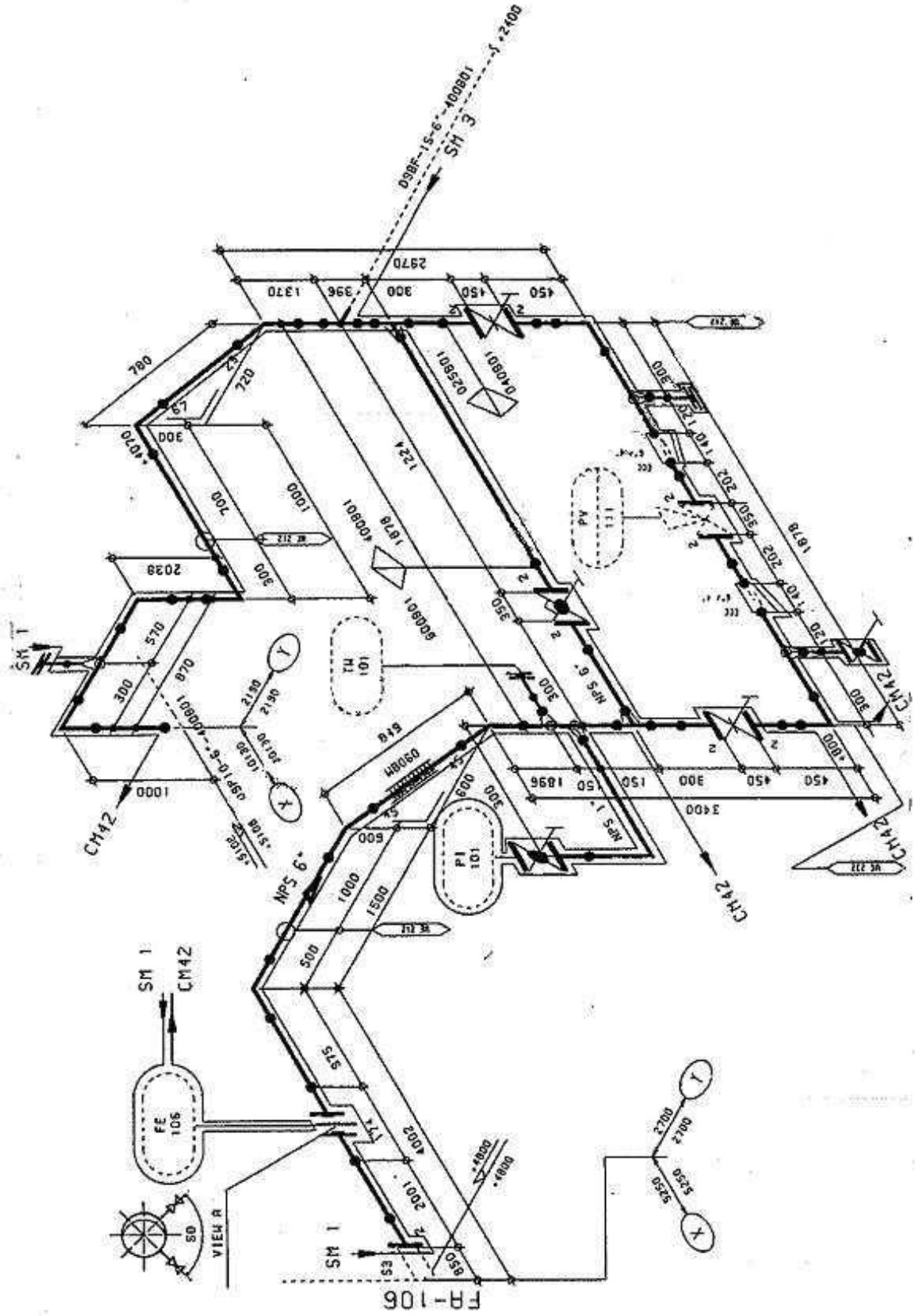


| Arch. No.. | Area | Sub-area | Document number | Rev. No.. | Issue date | Page | Pages |
|---|---|---|---|---|---|---|---|
| **19255** | **90** | **00** | **PR 30002** | **2** | **30-11-2013** | **1** | **1** |

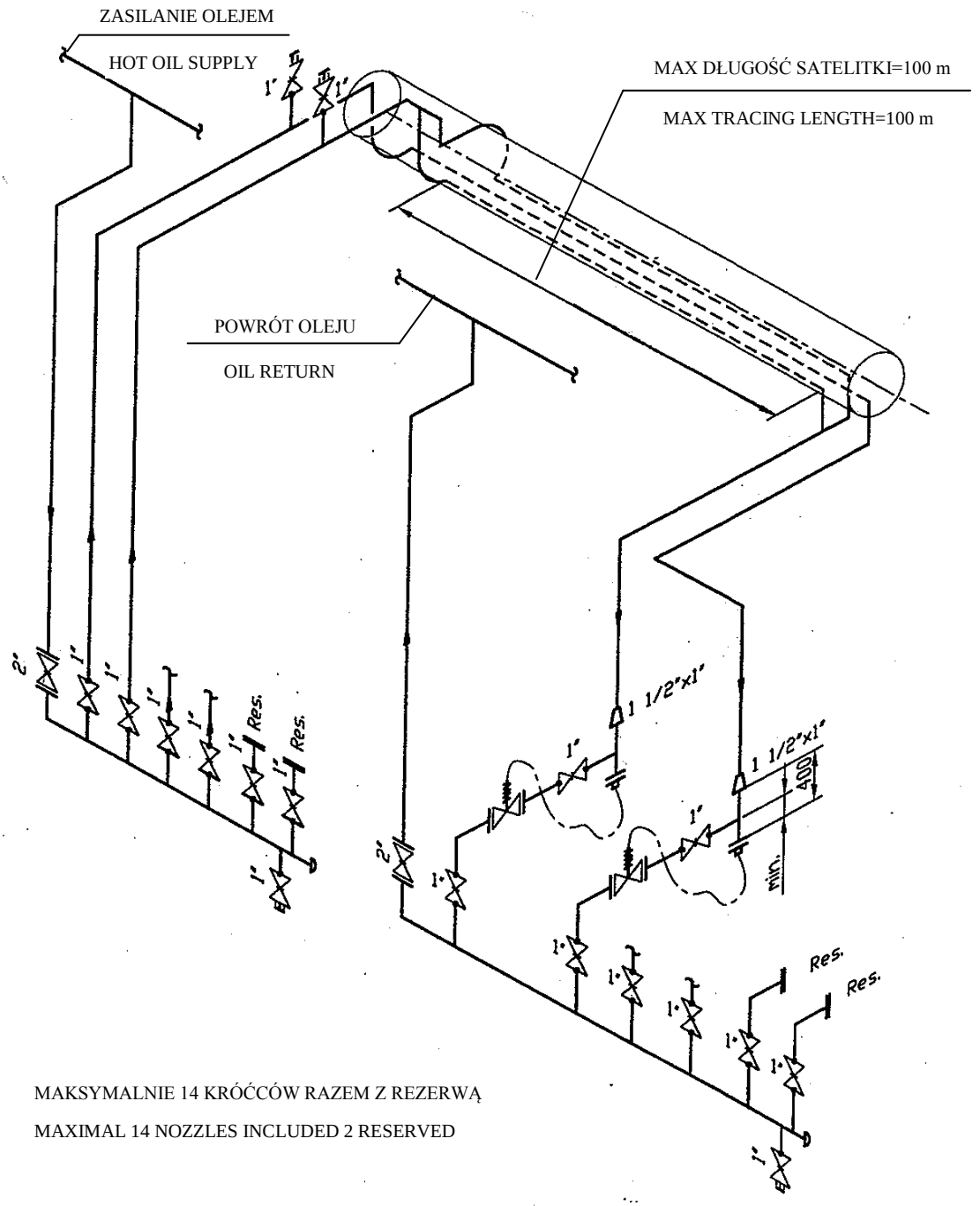


Notes:

- An example for three oil tracers has been shown. Maximum two tracers can be connected to one control valve.
- Two tracers connected to the same control valve must have the same route to maintain the same rate of flow in the tracer.

## 1. General

Utility station should be located on ground level and in such a way that as many supply points as possible can be reached with a maximum hose length of 15 m.

Utility stations shall be equipped with hoses. Hoses shall be fitted with CAMLOCK connector.

## 2. Design

The connections for nitrogen, air, steam and water must be suitably chosen to ensure that the hoses can only be coupled with the pertinent connection piece and not be interchanged by mistake. Therefore a different type of connector should be used on a water hose than on a steam hose.

The combination of these utilities, which depends on the contractor, shall be expressed in specification prepared for each project.

Standard technical requirements for "Utility Station" are published in specification No 2600 point 4.7.

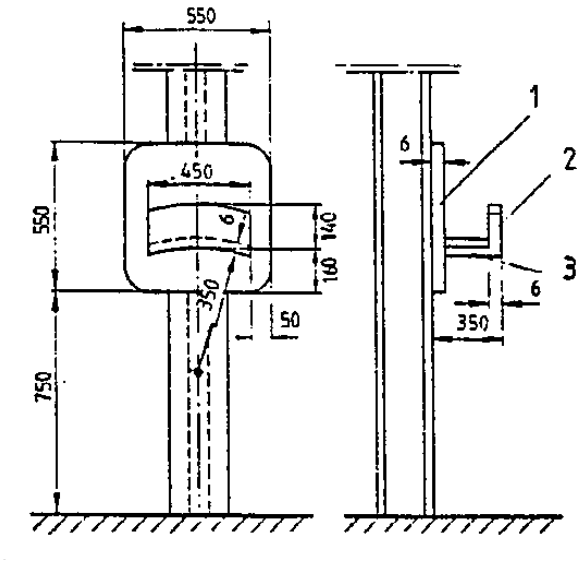


Figure 1.Typical Hose Hanger.

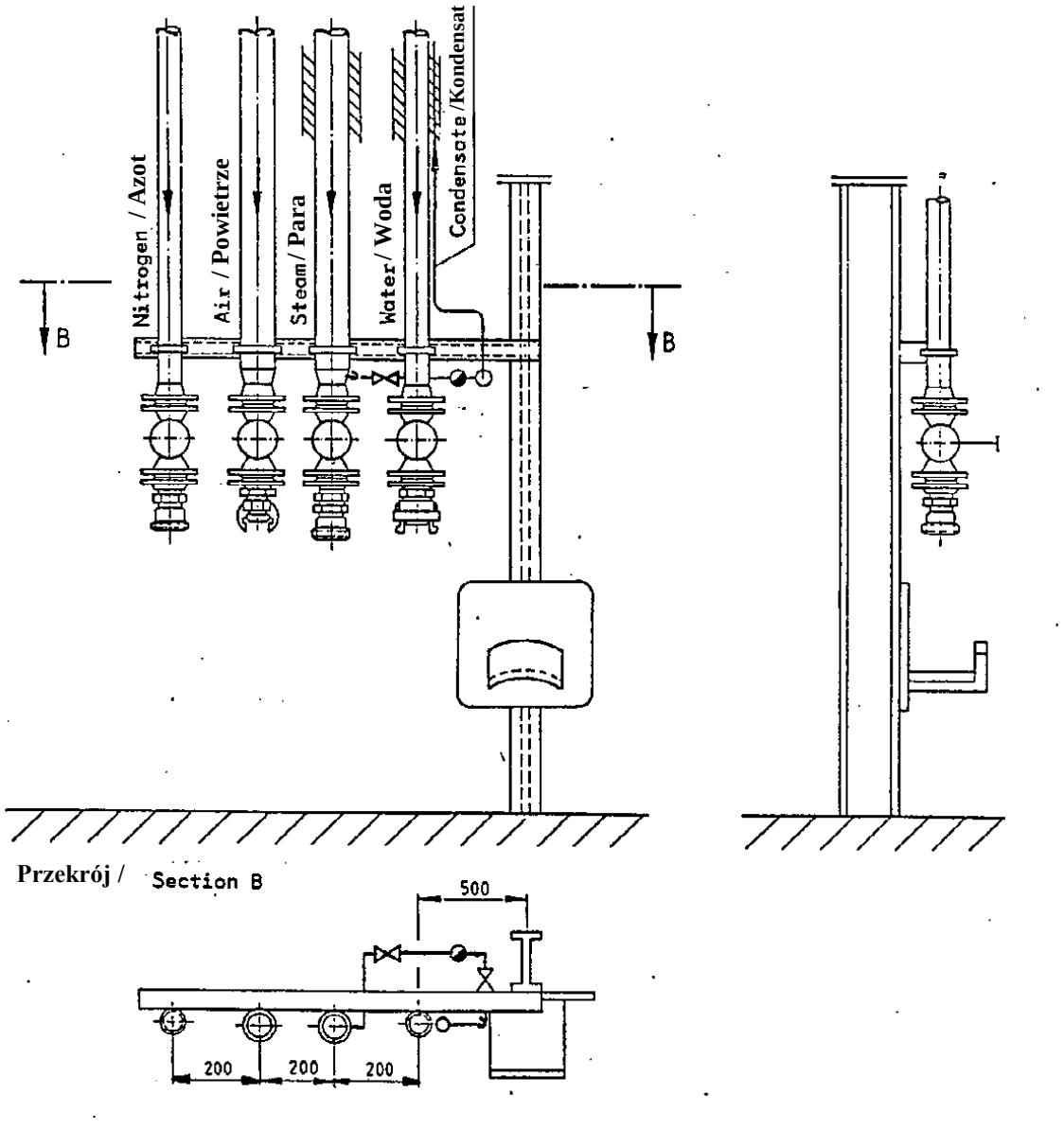


Figure 2. Utility Station, typical layout and cross section.

## 1. Arrangement of Pump Piping

### 1.1 Suction Piping

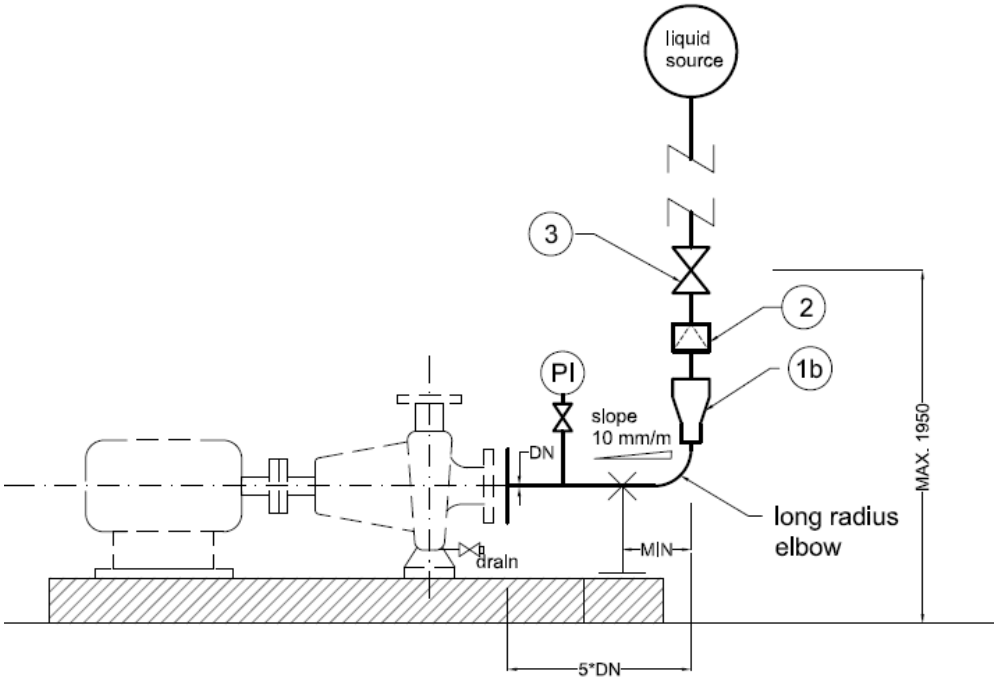


1b – Concentric reduction fitting,

2. stainer "Y" type, use of 'T" type stainer is not acceptable.

3. gate valve

Fig. 1: Application: Project related, preferably for NPS 2 and smaller at design temperatures up to and including 120°C.

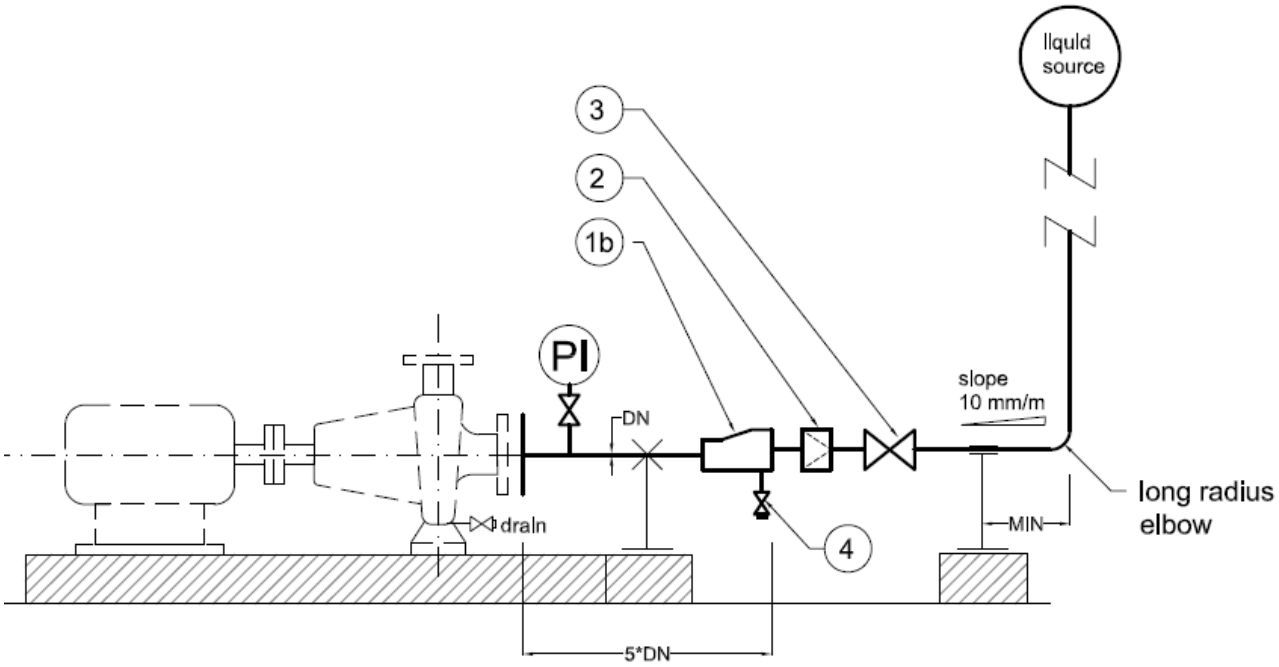


1b –eccentric reduction Bottom Flat (BF)

2. – stainer type "T"

3. – gate valve

4. drainage with plug

Fig. 2: Application: Suction pipeline with eccentric reduction type bottom flat (BF)

Remark

This is use when the piping must be completely drained to remove hazardous liquid or solids before performing maintenance, the eccentric reducer in the horizontal pump suction line may be oriented with the flat side of the bottom. For example, it is desirable that hydrofluoric acid piping be completely drained to avoid pockets of material that may prove hazardous to maintenance personnel.

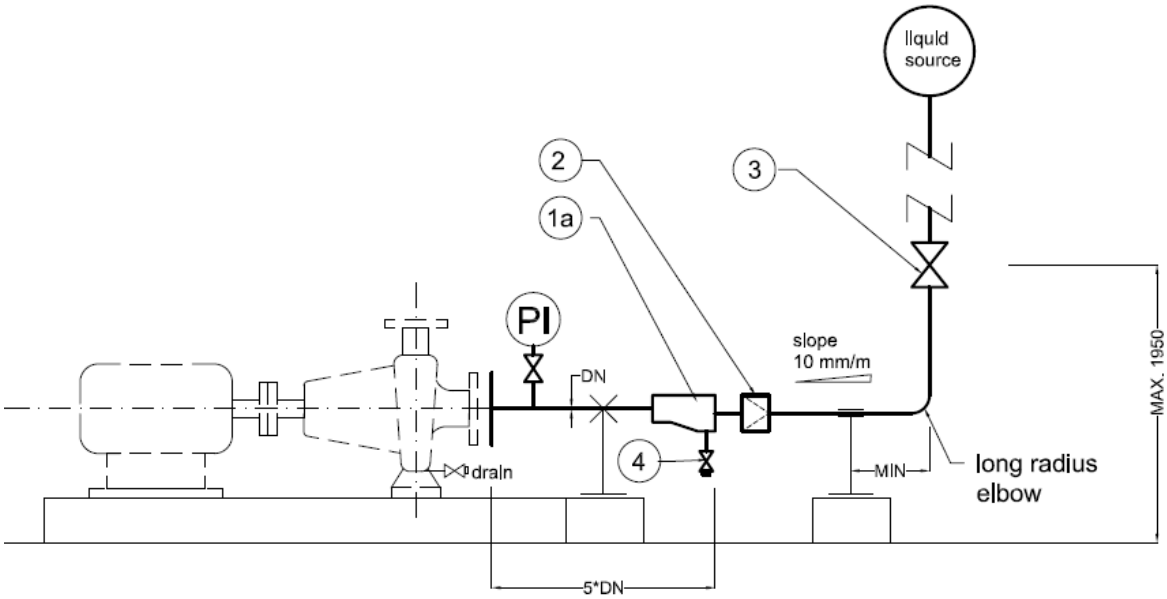


Fig. 3: Standard application for non harmful liquids with stainer type "T"

1a – eccentric reducer, Top Flat ("TF")

2 – stainer type "T",

3. – gate valve

4. drainage valve with plug.

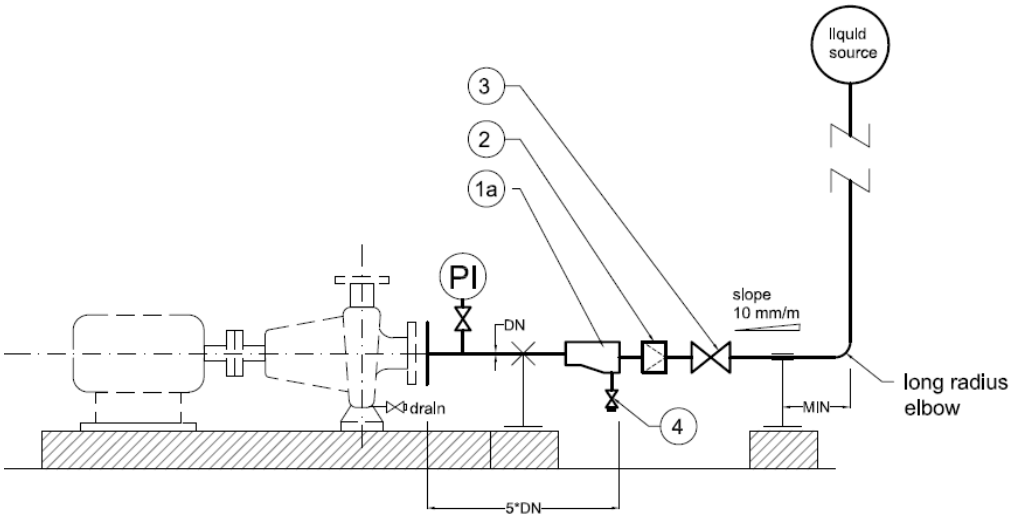


Fig. 4 Application for valve located on horizontal suction piping.

1a – eccentric reducer, Top Flat ("TF")

2 – stainer type "T",

3. – gate valve

4. drainage valve with plug.

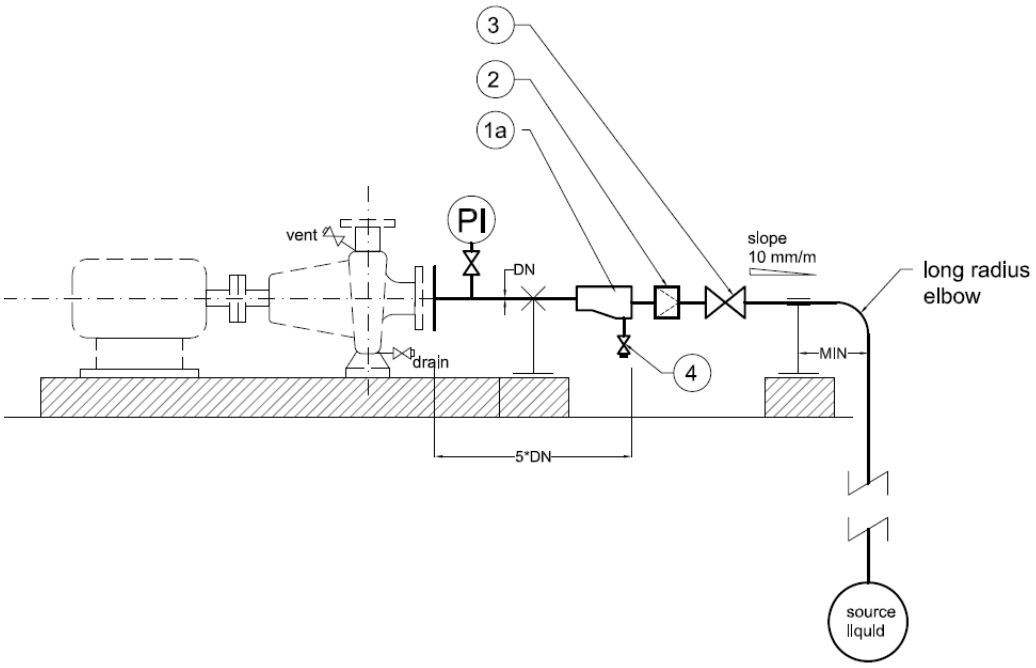


Fig.5 Application, for pump located above liquid source.

References this same as for Fig 4.

Remark:

Gas or vapour may then require manual venting to prime the pump if the pump is not a self-venting design.

**1.2 Discharge Piping**

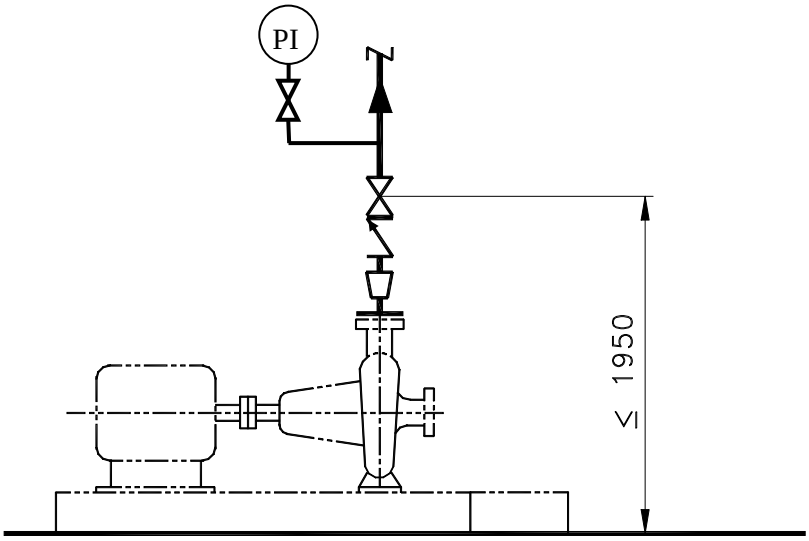


Fig. 4: Application: If overall lengths of components allow such arrangement

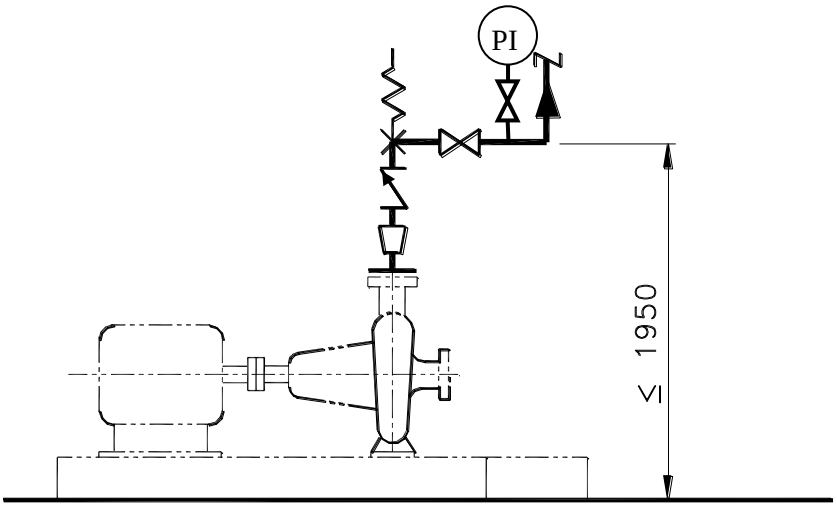


Fig. 5: Application: Dependent on overall lengths of components

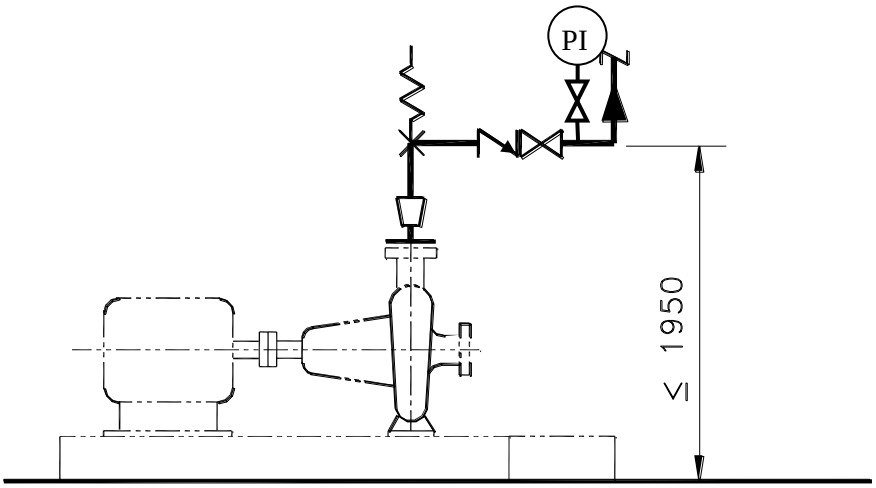


Fig. 6: Application: Dependent on overall lengths of components

### 1.3 Arrangement of Suction and Discharge Piping above the Pumps

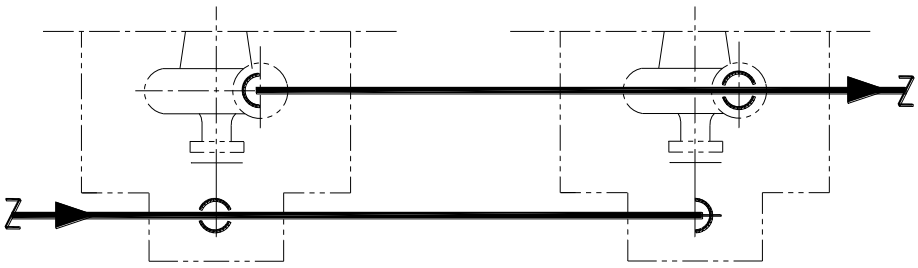

Fig. 7: Recommended arrangement Type A

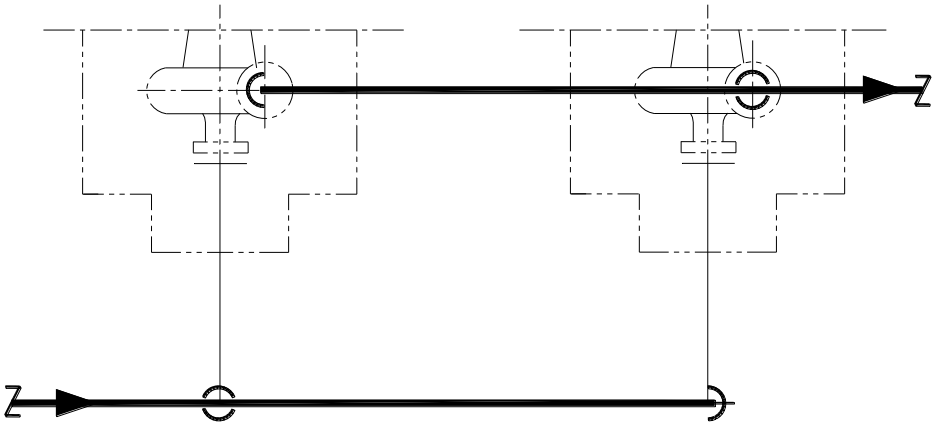

Fig. 8: Recommended arrangement Type A

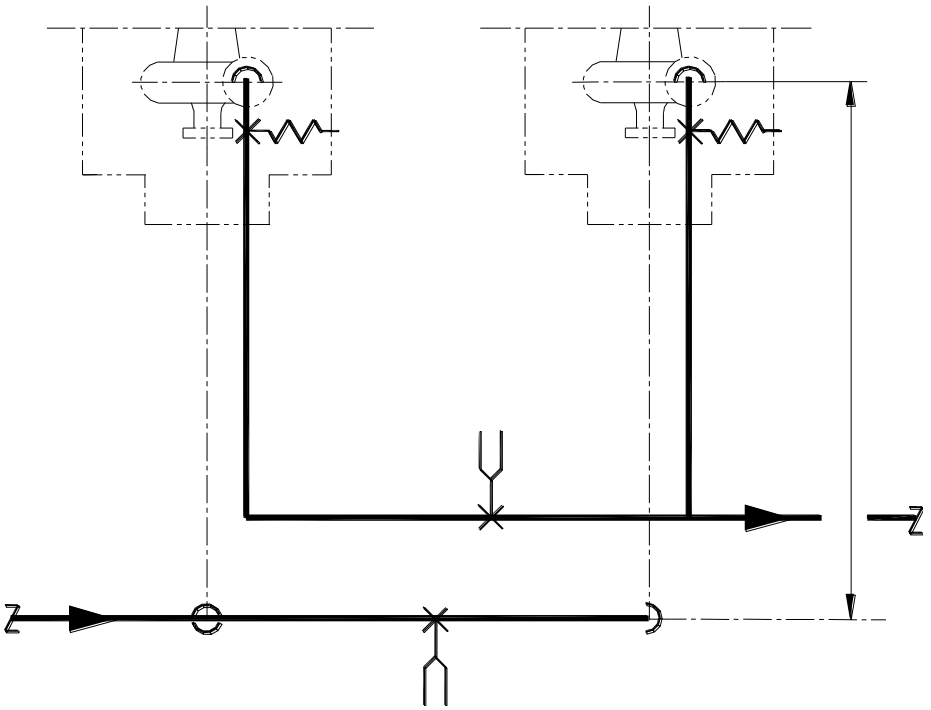

Fig. 9: Recommended arrangement Type B

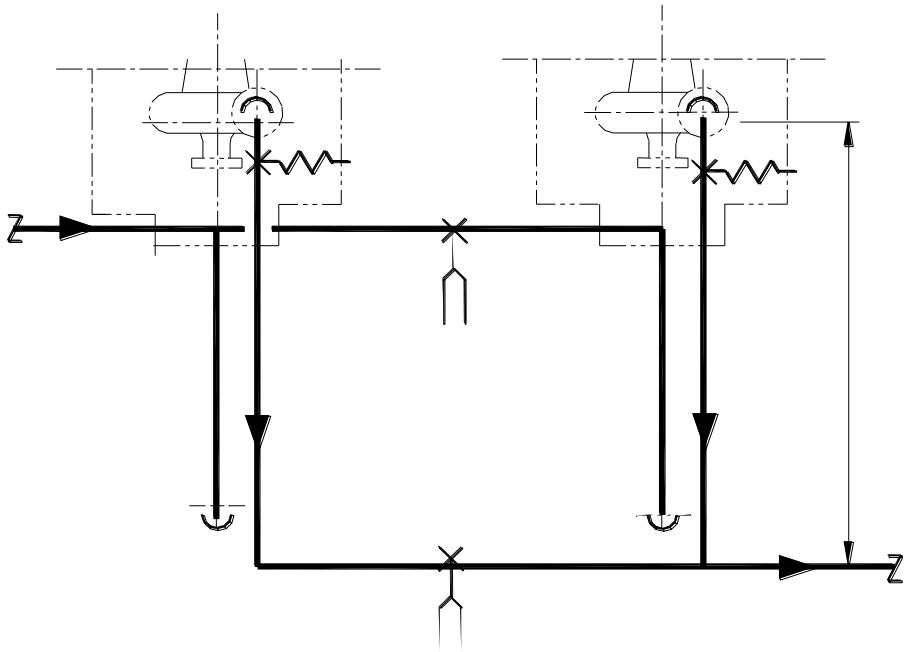

Fig. 10: Recommended arrangement Type B

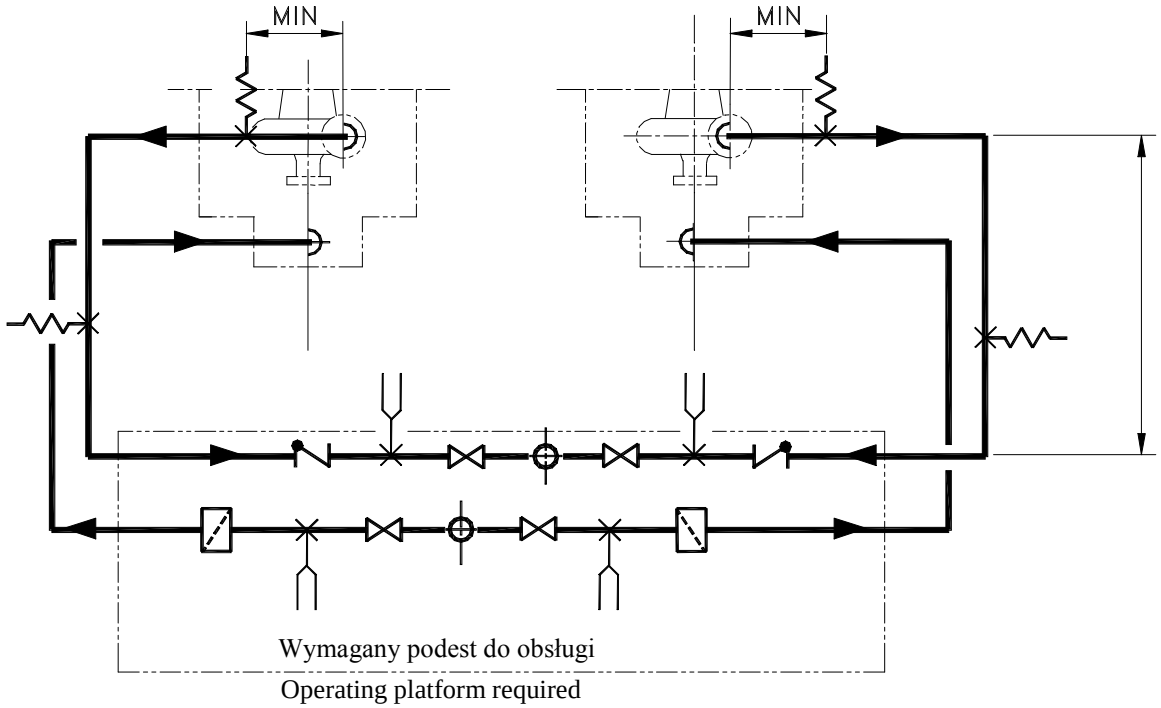


Fig. 11: Recommended arrangement Type C

## 1.4 Recommendation for the Selection of Piping Arrangement types above the Pumps

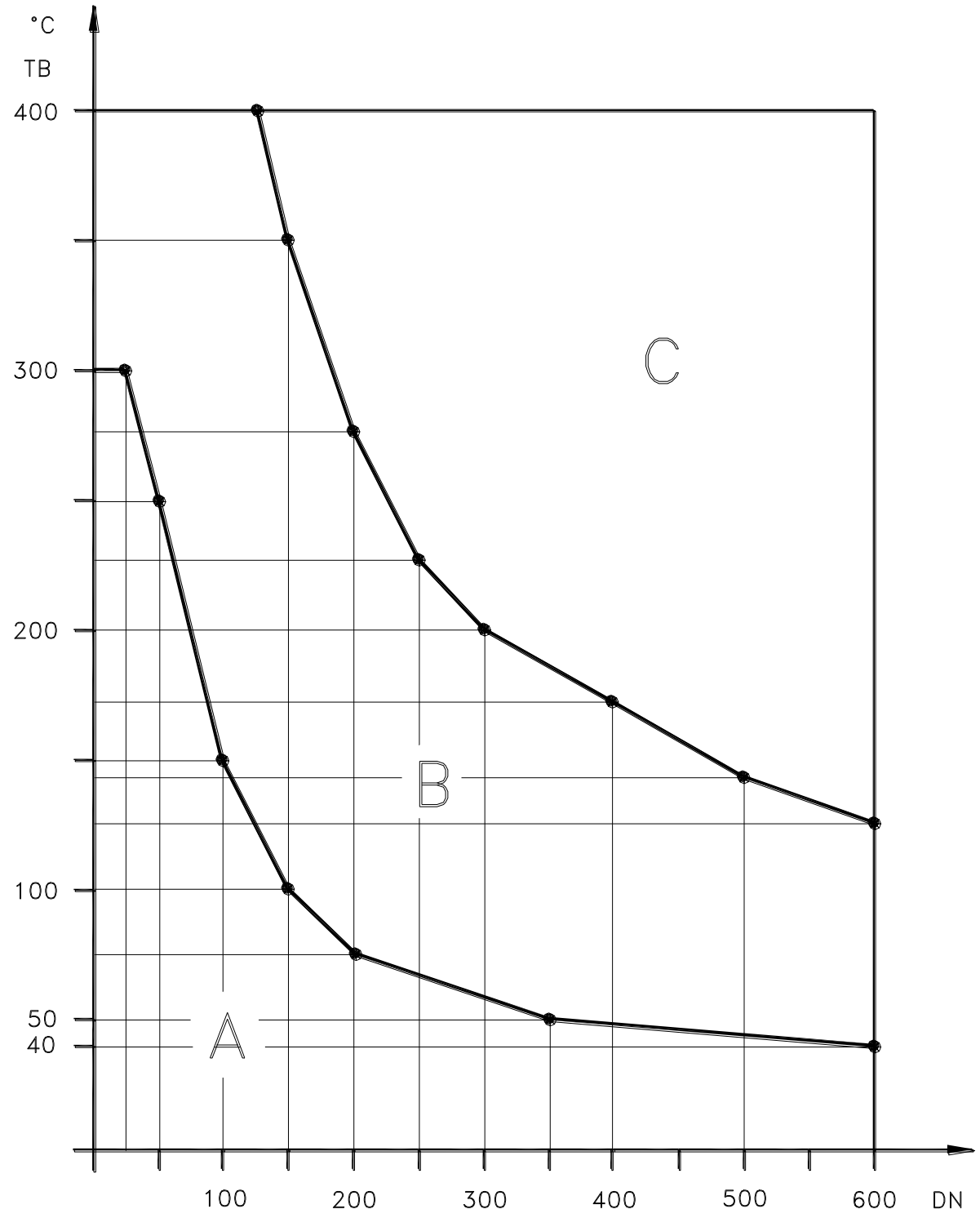


Fig. 12: Selection Diagram.

Fig.1 Piping flanges aligmnemt with machinery (equipment) nozzles – flanges bolt hole offset.

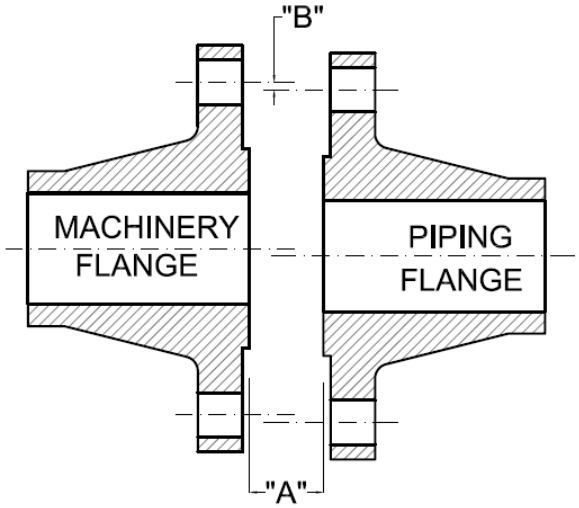


A- flange face separation shall be within the gasket spacing plus minus 1.5mm (1/16 inch) max. Only one gasket for flanges connection shall be used.

B- Pipe line flange holes shall be lined up with machinery nozzle bolt holes within 1.5mm (1/16inch) maximum offset from the center of the bolt hole to permit insertion of bolts without applying any external force to the piping.

2. Flanges sealing surface alignment.

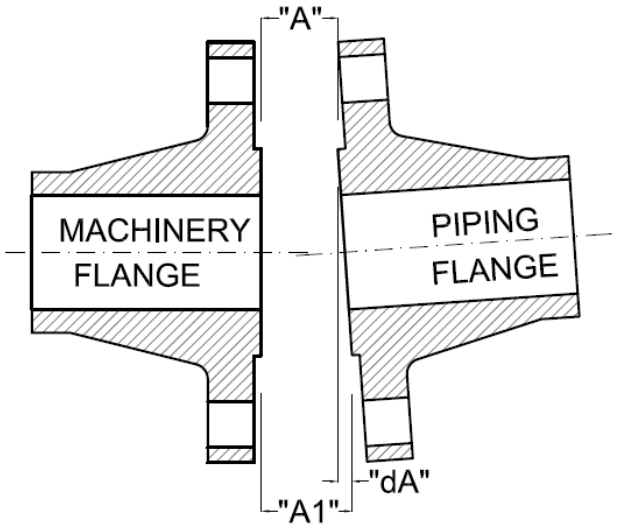


A – minimal distance between flanges faces (by feeler gauge measurement)
A1 maximal distance between flanges faces (by feeler gauge measurement)
dA – distance difference:
The machine and flanges faces shall be parallel to less than 10 micrometers per centimeter (0,001inch per inch) of pipe flange sealing surface outer diameter up to maximum 750 micrometers (0.03 inch). For piping flange sealing surface outer diameters smaller than 25 cm. (10 inch) the flange shall be parallel to 250 micrometers (0.010 inch).
Feeler gauge readings shall be taken at the outer diameter of the flange sealing surface.

**Type A**

Inlet and outlet piping manifolds are significantly larger than coil nozels and directly supported by the air cooler nozzles.

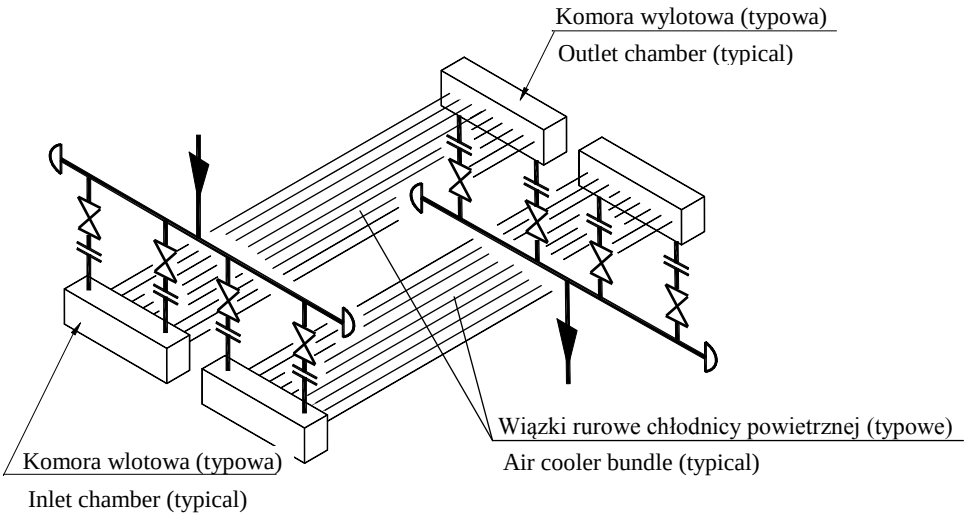


Fig 1:Piping arrangement Type A (not to be used for RTJ gaskets)

**Type B**

Inlet and outlet piping manifolds are significantly larger than the air cooler nozzles and are supported from the air cooler supporting structure.

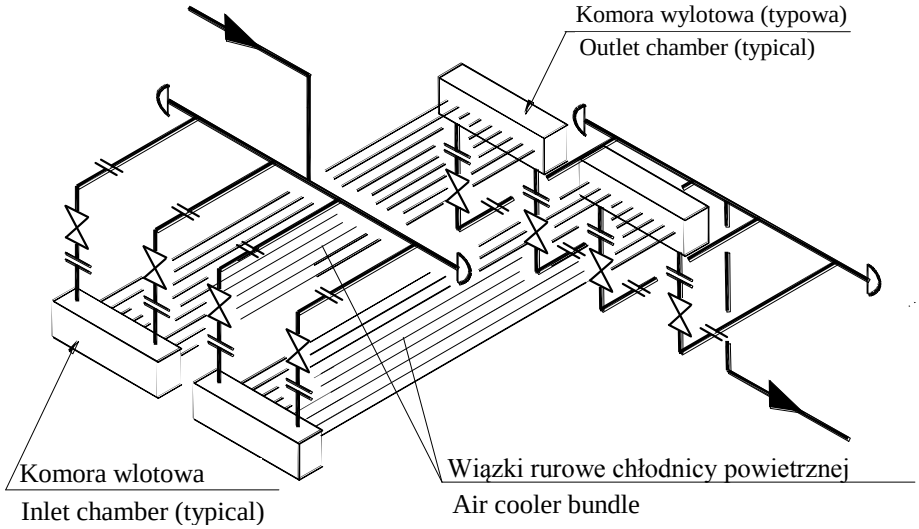


Note:
The inlet and outlet piping manifolds shall not disturb the dismantling of pipe bundles.

Fig. 2: Piping arrangement Type B

**Type C**

Inlet and outlet piping manifolds supported from the air cooler supporting structure.

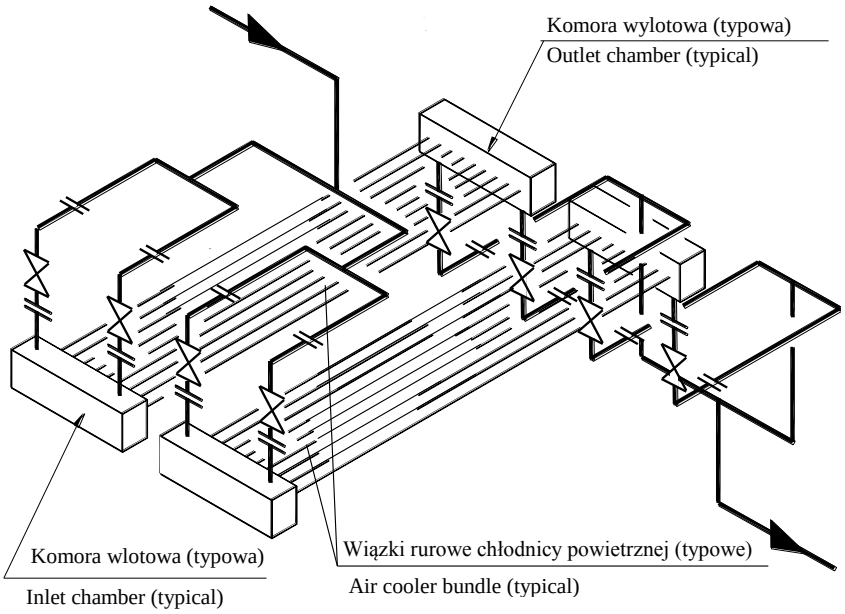


Note:
The inlet and outlet piping manifolds shall not disturb the dismantling of pipe bundles.

Fig. 3: Piping arrangement Type C

**Loads exerted by pipelines on nozzles**

Loads on the cooler nozzles and the arrangement of liquid flow as shown in P&I shall determine the type of piping.

The below-mentioned decisions should be made together with the cooler manufacturer to minimize loads on the nozzles:

- The location of the point with zero longitudinal and lateral displacements of the cooler chamber.
- Can the cooler chamber be displaced without exceeding the allowable load on the cooler nozzle?.
- Is it possible to use a buffer between the chambers of coolers? In such case thermal displacements of pipelines and cooler chambers are equal and thus nozzle loads are reduced.
- What lens compensator or flexible metal hose is accepted by the customer for a fixed attachment of cooler chambers?
- What loads from pipelines can be taken by the cooler structure.

▪

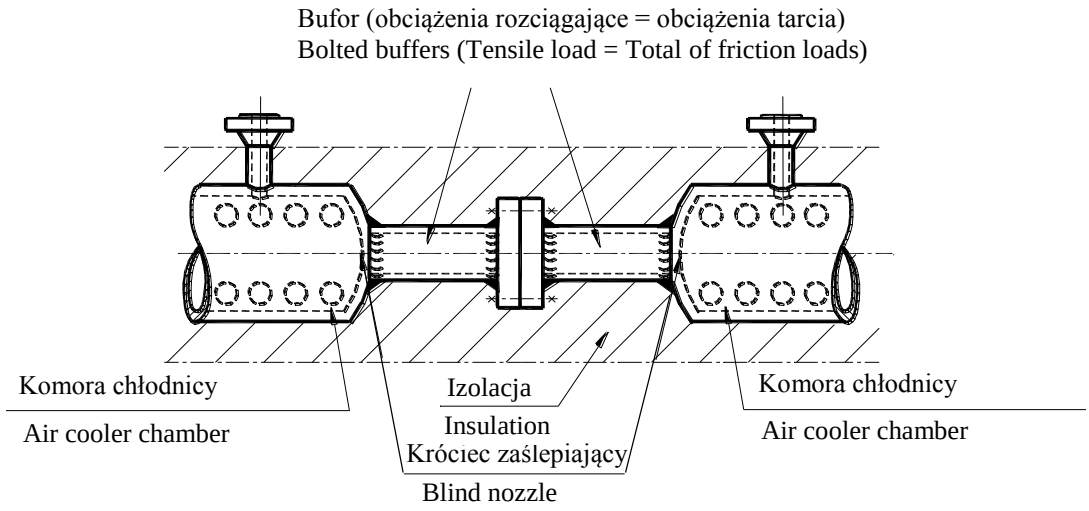


Fig. 4: Metal buffer between air cooler chambers

## 1. Arrangement of Control Valve Piping

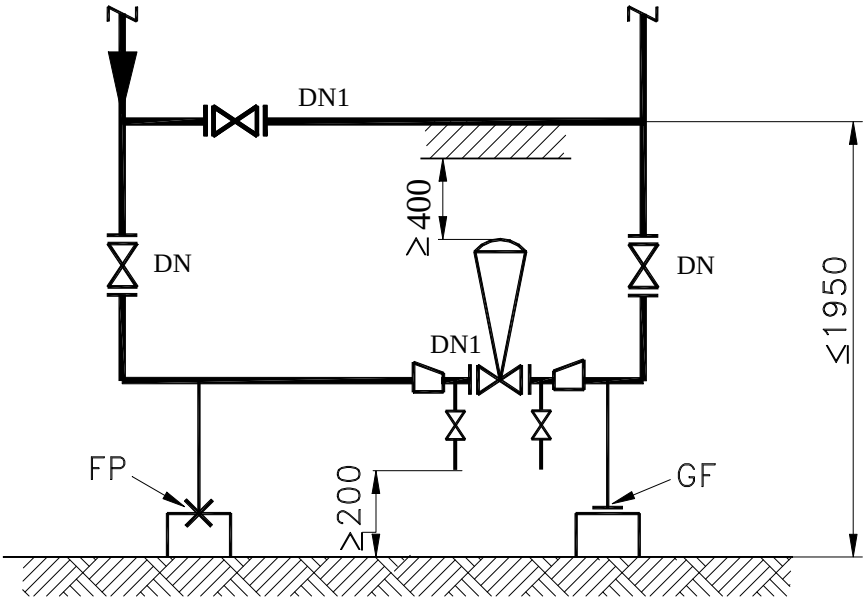


Fig. 1: Basic control station type

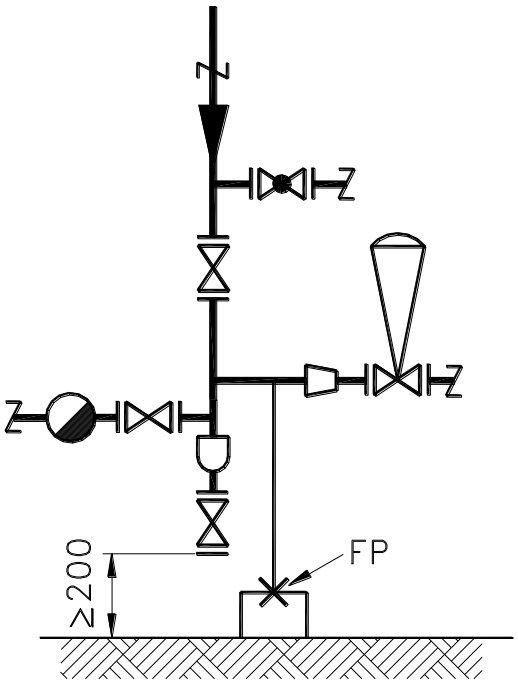


Fig 2: Typical variation for steam piping

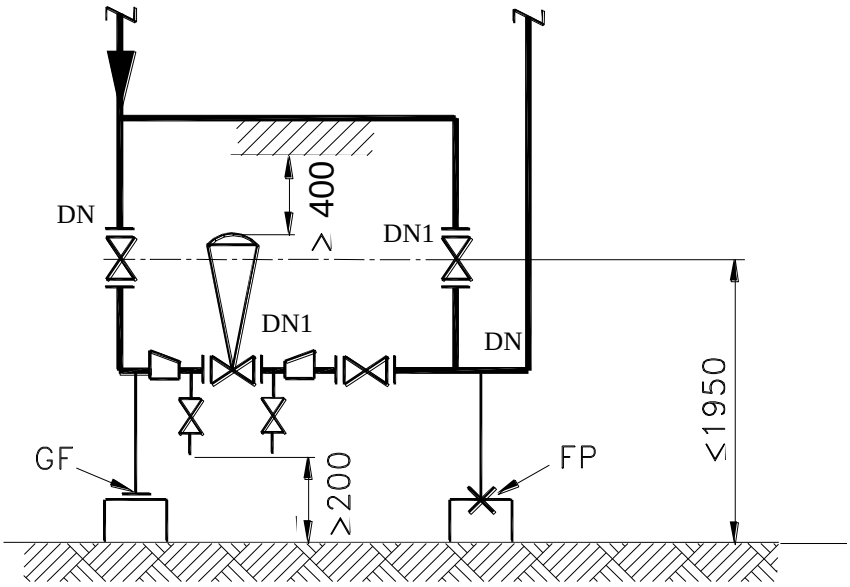


Fig 3: Typical arrangement of flexible bypass

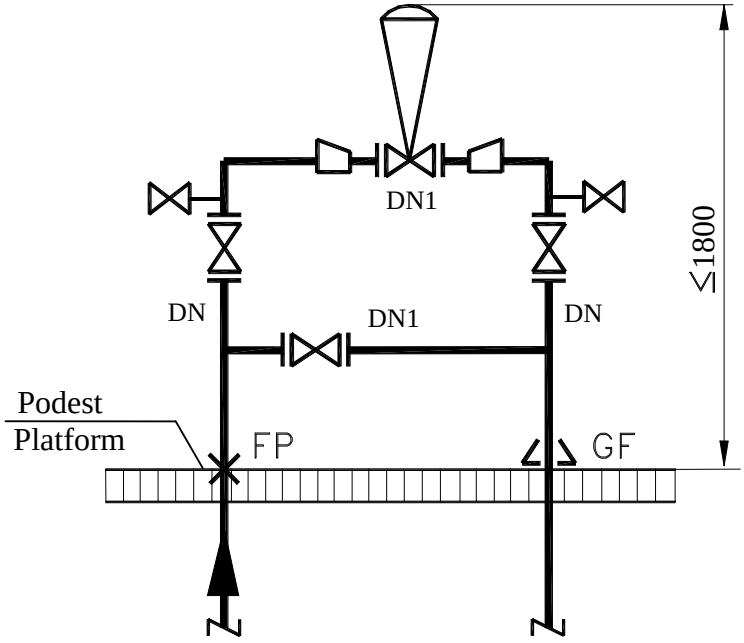


Fig 4: Typical arrangement above platform

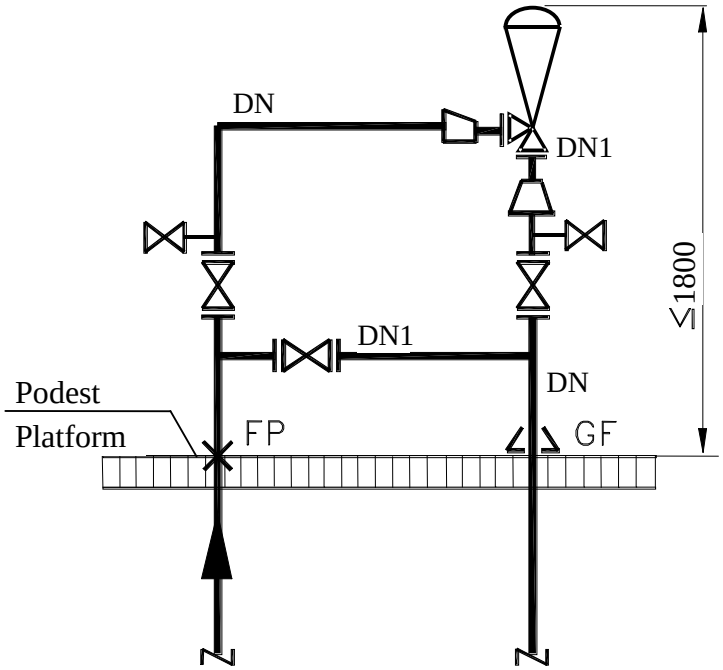


Fig 5: Typical arrangement with angle control valve

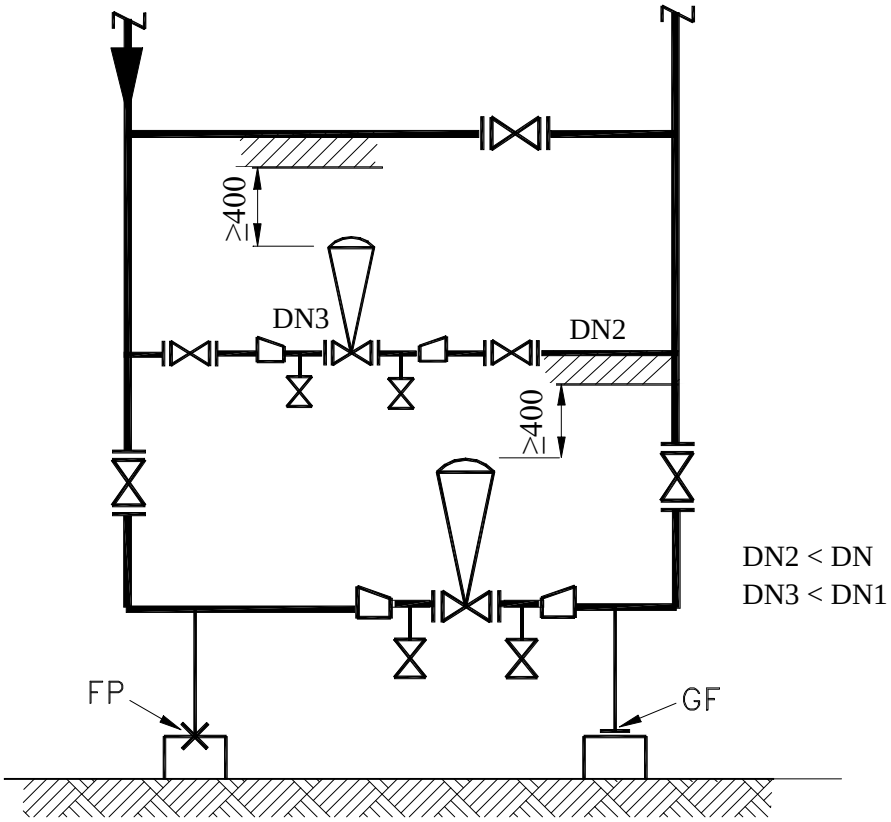


Fig. 6: Typical piping of two control valves of different sizes intended for two different versions of the installation operation.

2. **Arrangement of Pressure Reducing Valve Piping**

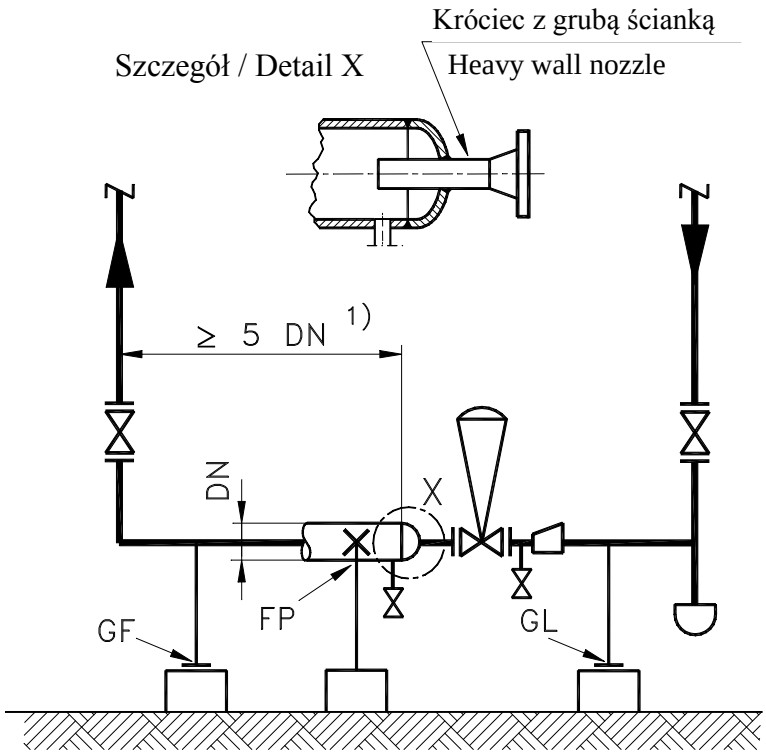


1) Bez odgałęzień i pochwy termometru
No branch piping and no thermometer pocket in this area

Fig. 7: Typical arrangement of a pressure reducing station

Notes:

FP – Anchor

GF – Guide

GL – Base support

## 1. Design drains

Drains shall be provided at the low points and pockets of all piping. Unless stated otherwise on the P&I diagram, the drains shall be NPS ¾" (DN20). Drains at piping NPS ¾" (DN20) and smaller shall be pipe size.

Applying of caps (instaed of blind flange) is acceptable for drains ¾" and smaller.

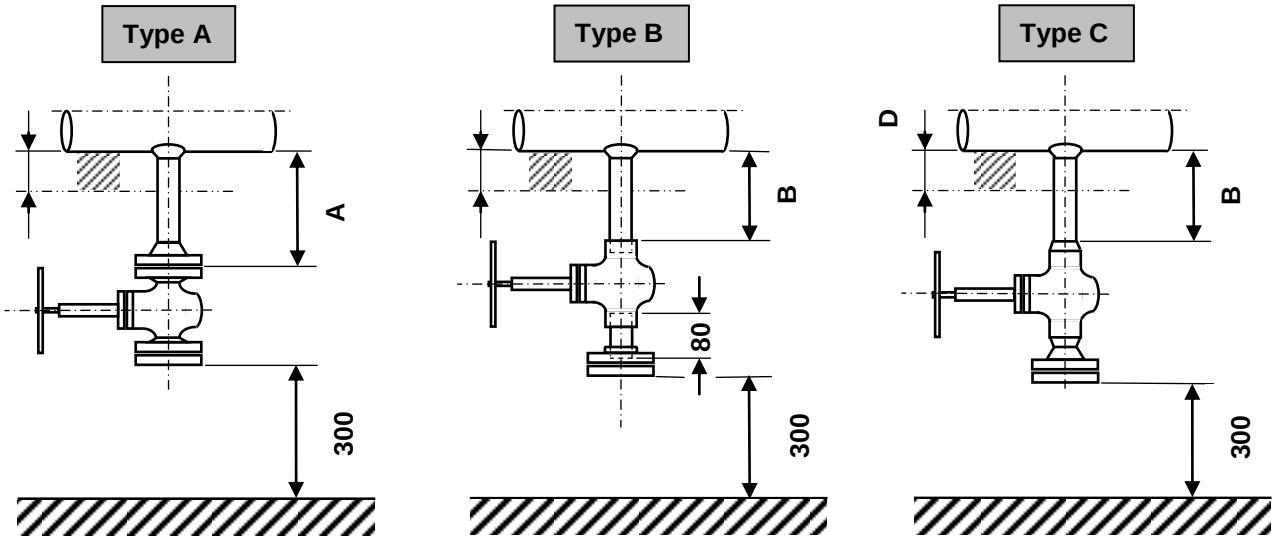


Note:

If there is not enough space for nipples of the type A, B or C in vertical arrangement, than it is allow to tilt nozzle at an angle of $45^{o}$ to the pipe line.

The type of block valve, fitting between pipe and drain, material shall be selected in accordance with the piping class.

2. **Design vents**

Vents shall be provided at the highest points of all piping, which are subject of a hydrostatic pressure test. Unless stated otherwise on the P&I diagram, the vents shall be NPS ¾" (DN20). Vents at piping NPS ¾" (DN20) and smaller shall be pipe size.

**Type A**

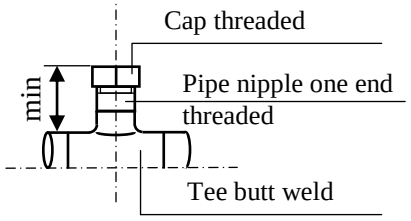


Type A is to be used for pressure testing purpose.

Note: After the pressure test the cap shall be welded round.

**Type B** **Type C** **Type D**

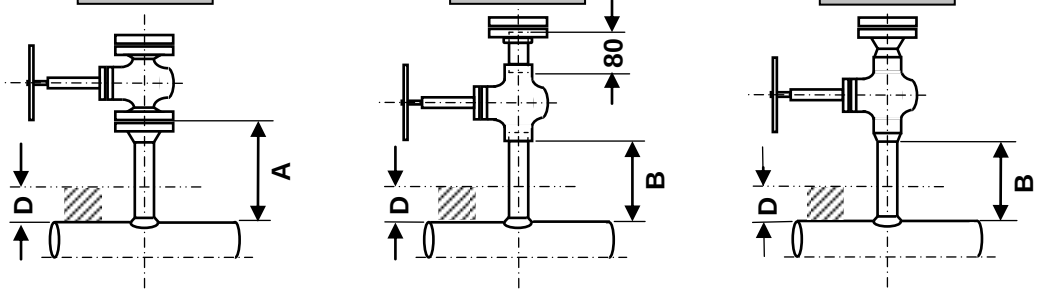


Types B, C, D are to be used for vented pipelines in accordance with P&I diagram.

Nozzle length for drains and vents

| Nozzle length | Insulation thickness **D** (mm) | | | | | | |
|---|---|---|---|---|---|---|---|
| | 0 to 80 | 81 to 130 | 131 to 180 | 181 to 230 | 231 to 280 | 281 to 330 | 331 to 380 |
| **A** | 180 | 200 | 250 | 300 | 350 | 400 | 450 |
| **B** | 120 | 170 | 220 | 270 | 320 | 370 | 420 |

Note:
Nozzles for drainage and vents for pipelines ½" and for ¾" shall be done with pipes according Schedule 160 for pipelines up to 2" nozzles shall be done with pipes according Schedule X-Stg.

Table 1: Main Design Types

| No. | Design type | Pump | Application |
|---|---|---|---|
| **1** | 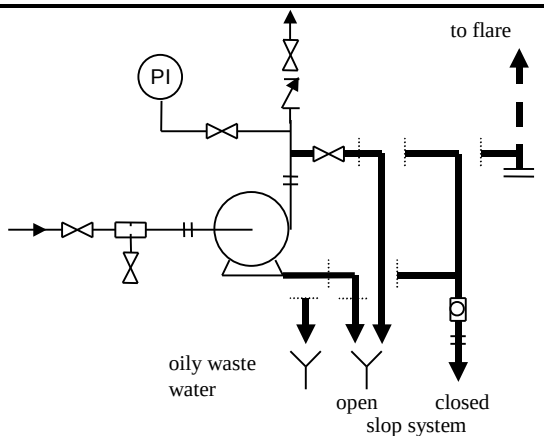 | **Centrifugal pump** | For hydrocarbons, largely liquid at working temperature and atmospheric e.g. gasoline and hydrocarbons heavier than $C_4$.<br>If the percentage of $C_3$ and lower boiling hydrocarbons is high, the connection to flare can be necessary. |
| **2** | 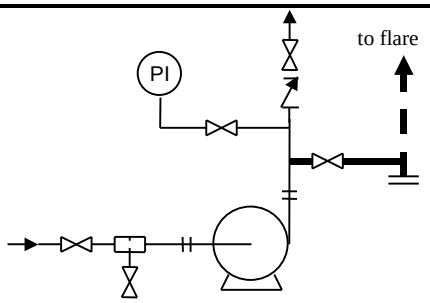 | | For hydrocarbons vaporous at 20°C and atmospheric pressure, e.g. $C_4$ and lowboiling hydrocarbons. |
| **3** | 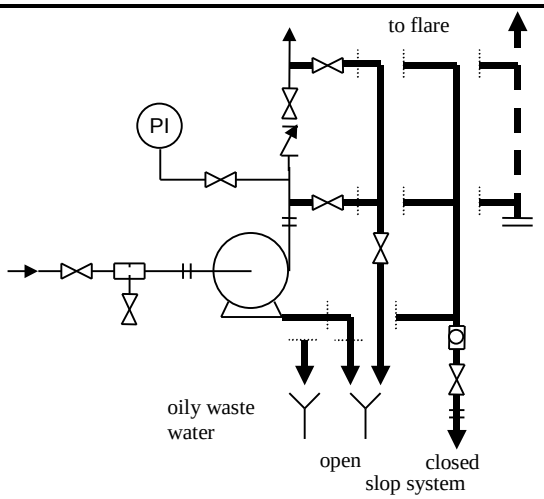 | | As described under Design No.1 and for keeping the pump cold or hot. |

| No. | Design type | Pump | Application |
|---|---|---|---|
| **4** | 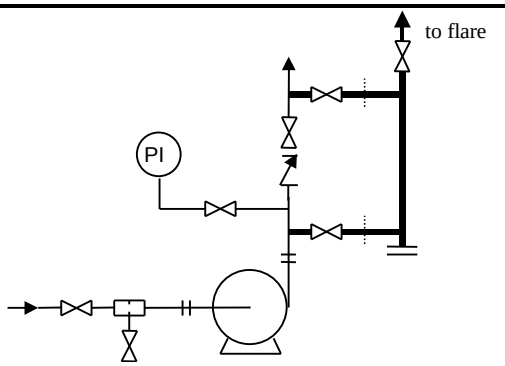 | **Centrifugal pump** | As described under Design No. 2 and for keeping the pump cold or hot. |
| **5** | 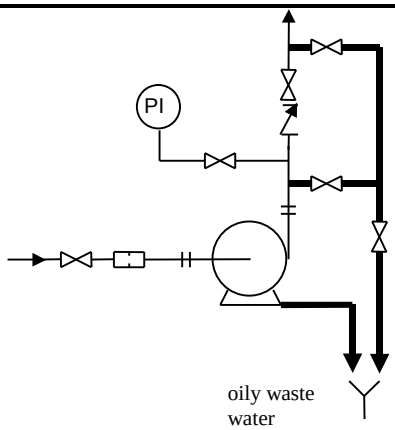 | | For water pumps. |
| **5a** | 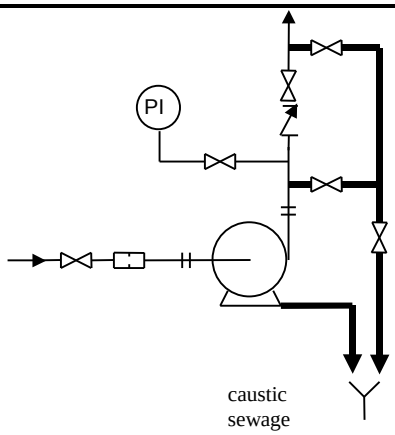 | | For caustic soda pumps. |

| No. | Design type | Pump | Application |
|---|---|---|---|
| **6** | 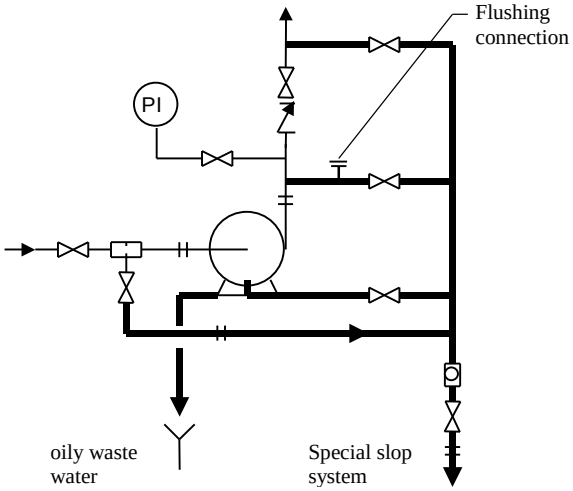 | **Centrifugal pump** | For toxic and caustic fluids. |
| **7** | 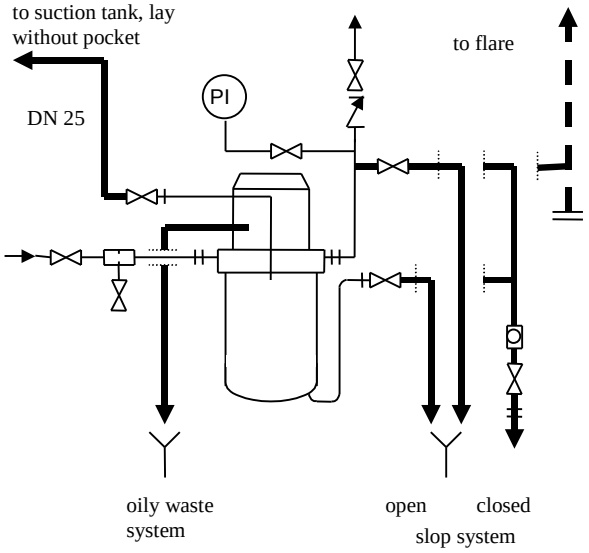 | **Can pump** | As described under Design No. 1. |
| **8** | 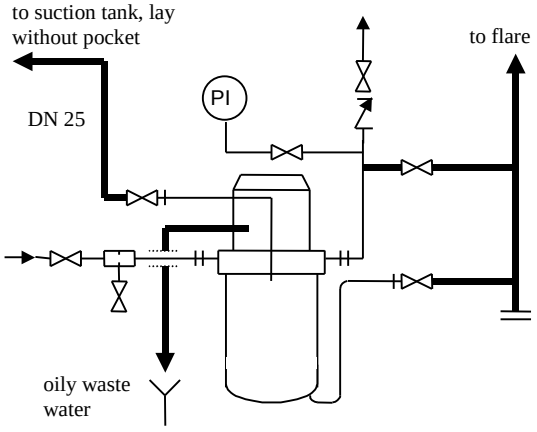 | | As described under Design No. 2. |

| No. | Design type | Pump | Application |
|---|---|---|---|
| **9** | 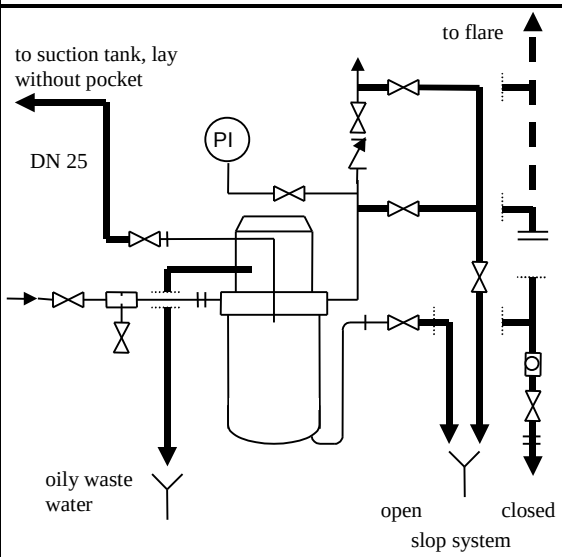 | **Can pump** | As described under Design No. 3. |
| **10** | 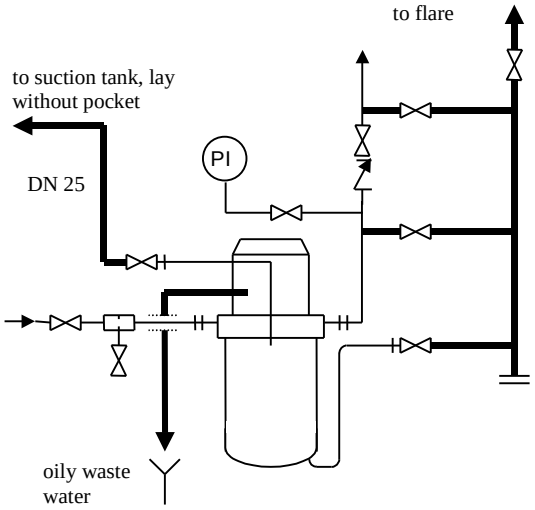 | | As described under Design No. 4. |
| **11** | 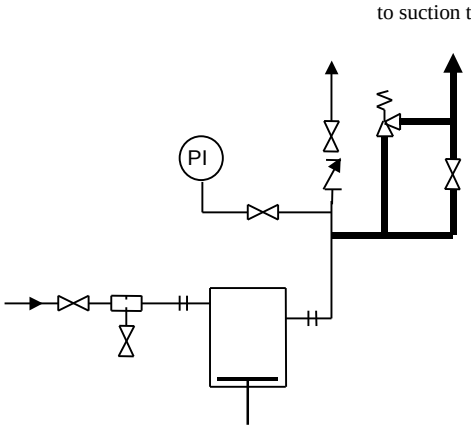 | **Displacement pump** | For all fluids. |

Table 2: Additional Design Types

These designs are only to be applied in conjunction with the main designs.

| No. | Design type | Pump | Application |
|---|---|---|---|
| **12** | 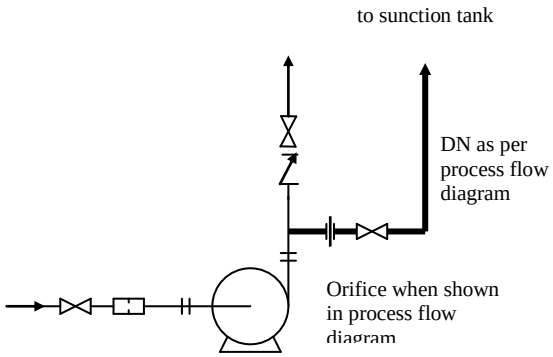 | **Centrifugal pump** | For min. flow line back to suction tank. |
| **13** | 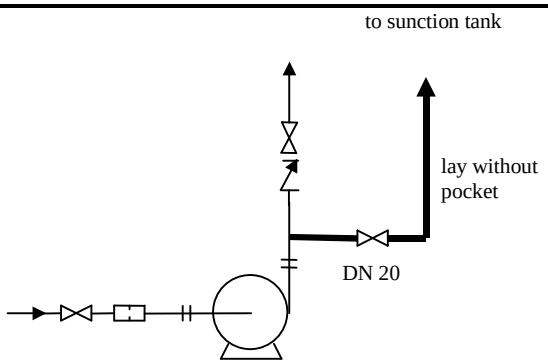 | | For the vacuum startup pipe. |
| **14** | 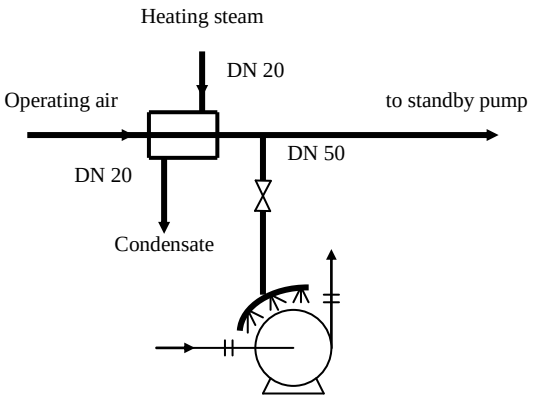 | | Warm air for heating pumps delivering cold fluids (working temperature less than -10°C).<br><br>Hot air heating for vertical centrifugal pumps with liquified gases. |

## 1. Pressure nozzles for horizontal and vertical pipes

Execution examples

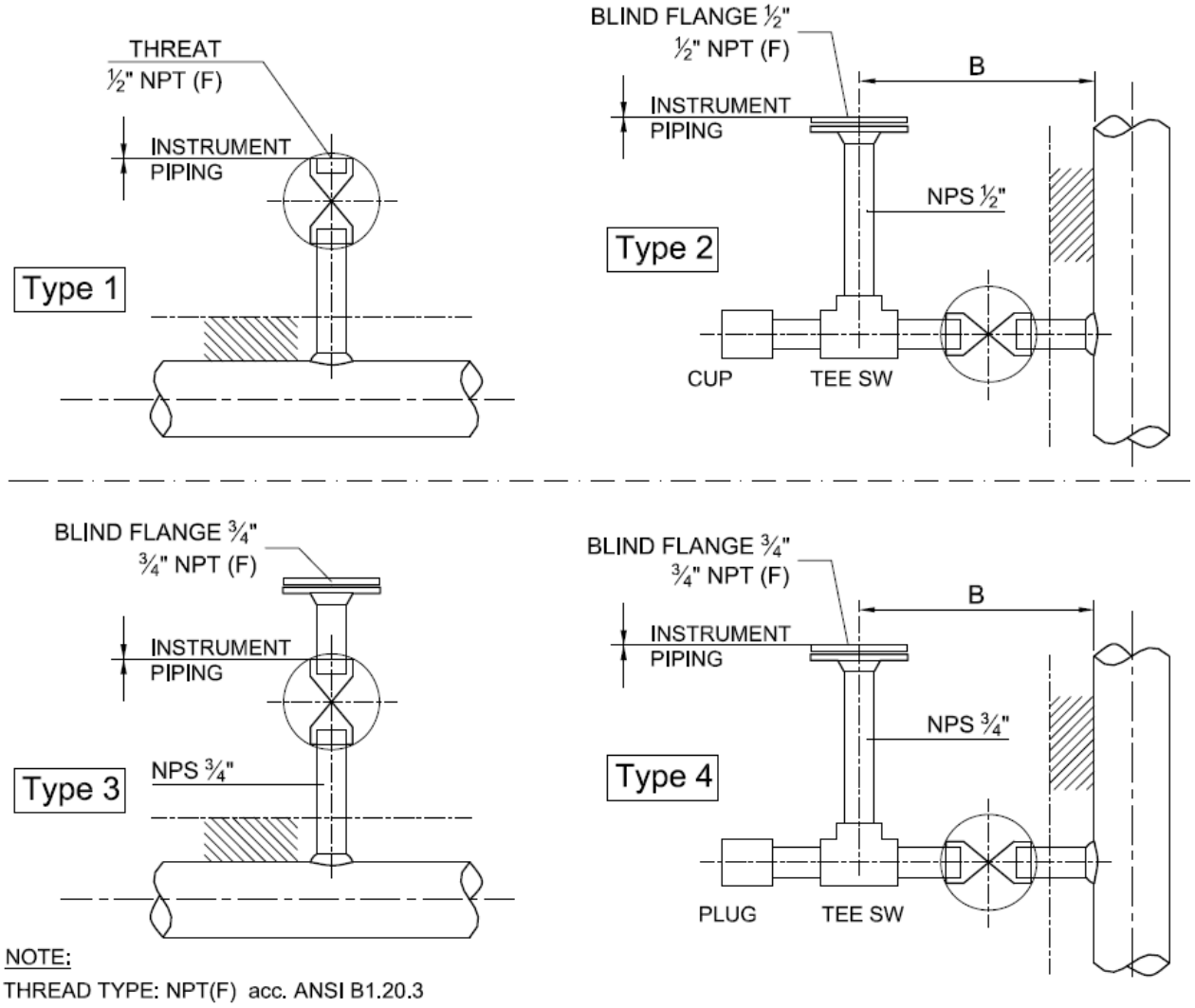


NOTE:
THREAD TYPE: NPT(F) acc. ANSI B1.20.3

## 2. Pressure nozzles for vessels

Execution examples

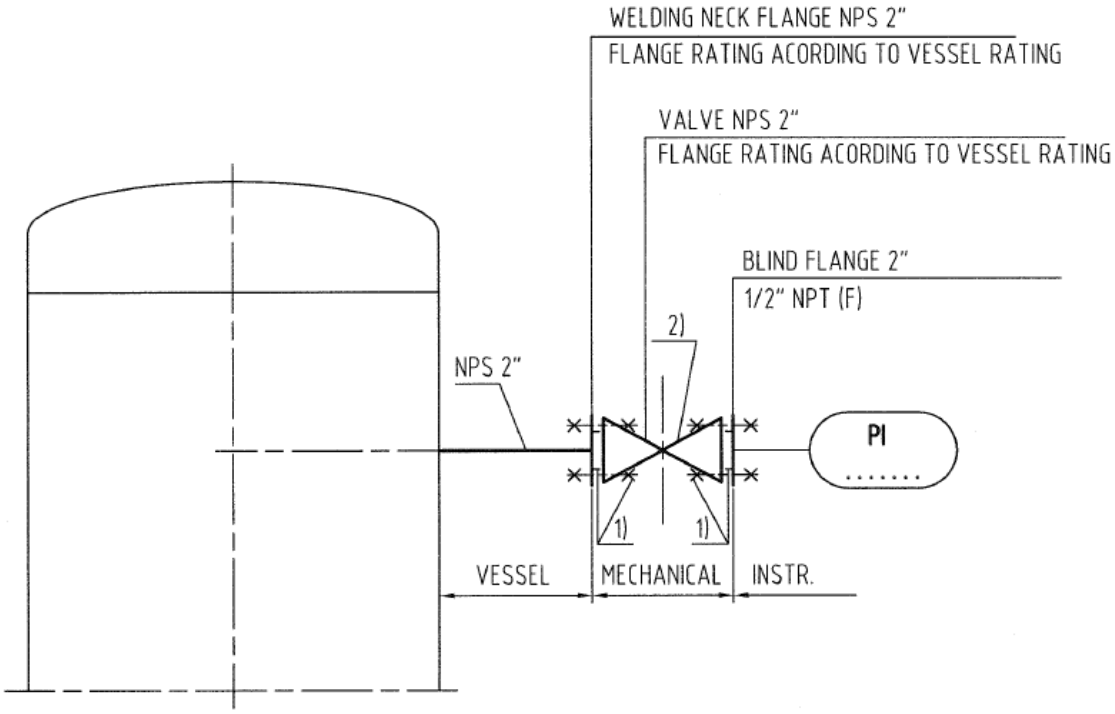


Notes:

1) - Bolts, nuts and gaskets are included in piping. All parts according to the pipe class and P&ID. Type and location acc. to P&ID.

2) - Quantity of block valves acc. to P&ID.

3. **Pressure nozzles using seal diaphragm for vessels and pipelines**

Execution examples

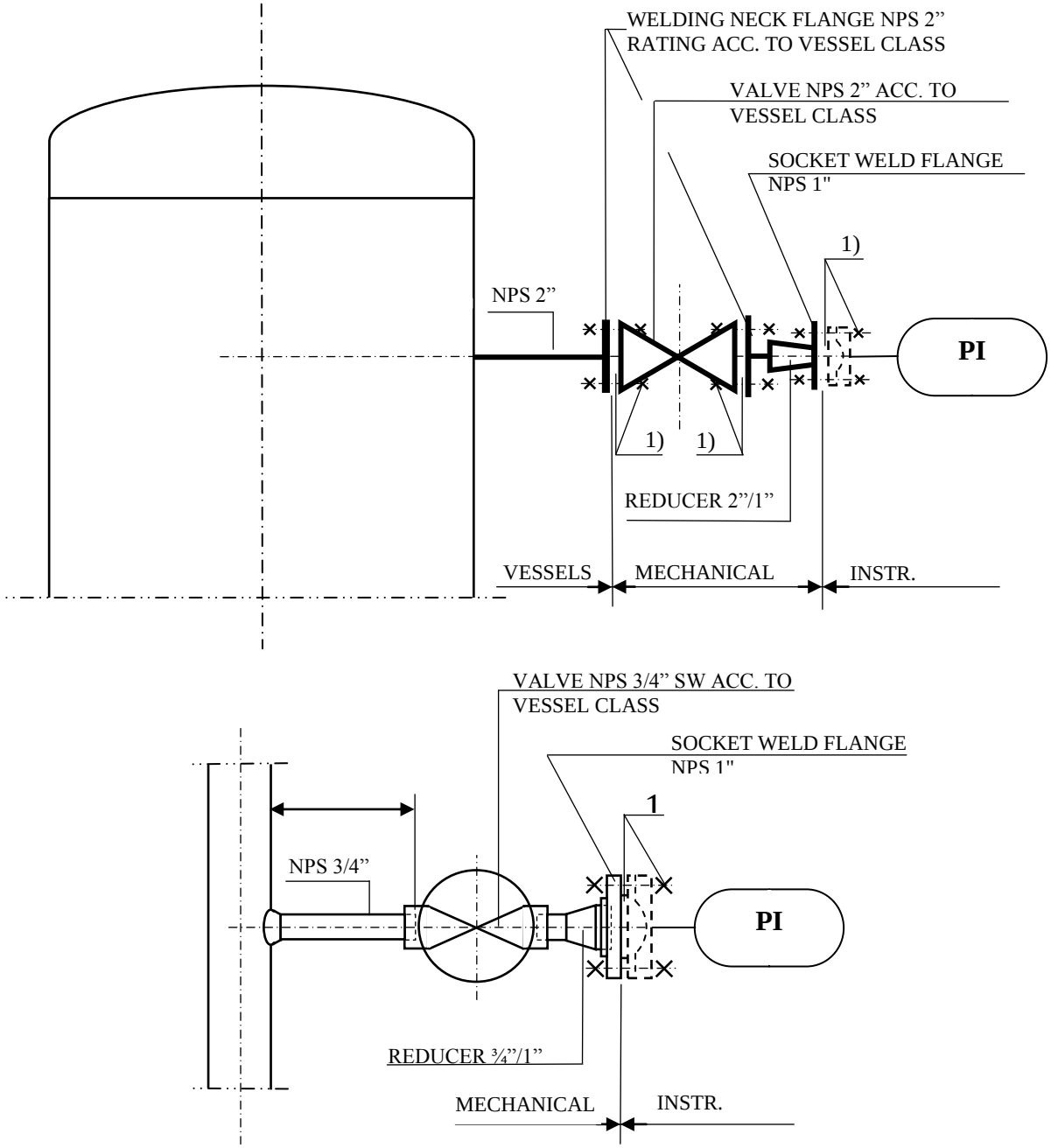


Notes:

1) - Bolts, nuts and gaskets are included in piping. All parts according to the pipe class and P&ID. Type and location acc. to P&ID.

4. Pressure (PT) nozzles for horizontal and vertical pipes, for vessels and columns

**Horizontal lines**

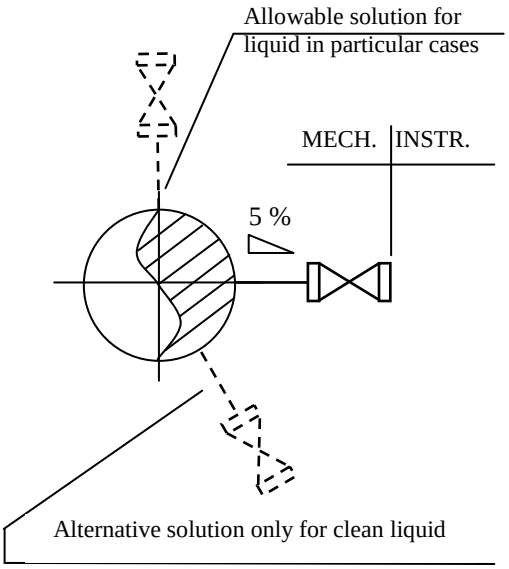


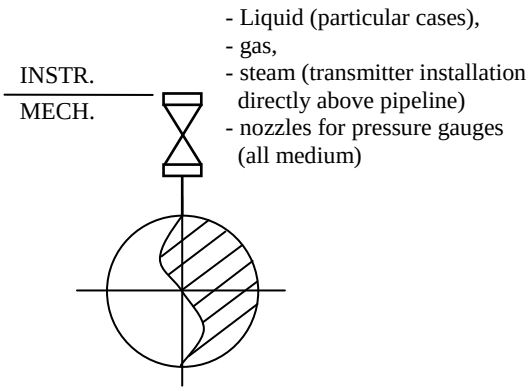


**Vessels, column**

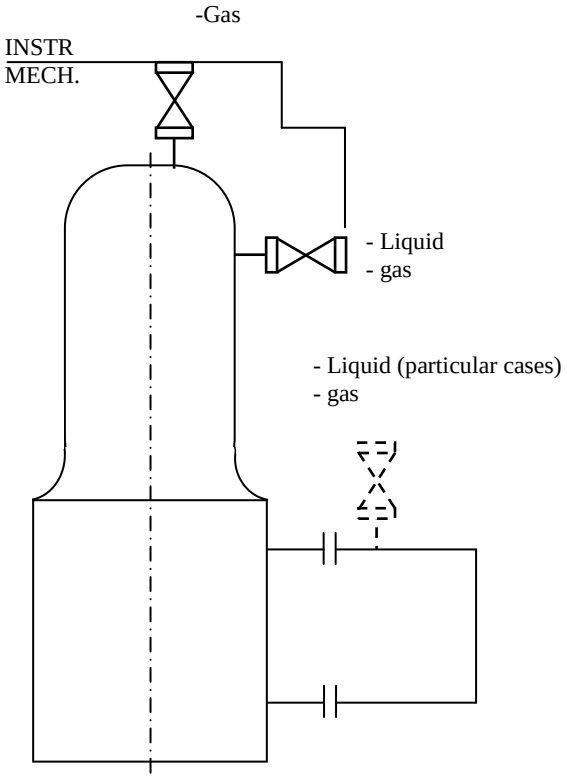


**Vertical lines**

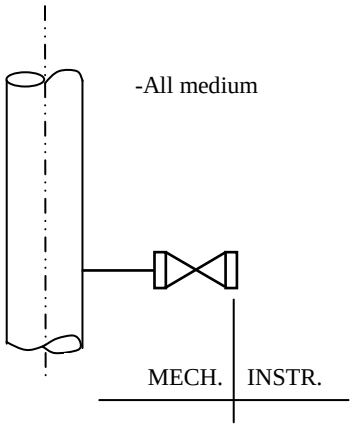

## 5. Temperature nozzles for vessels

Execution examples

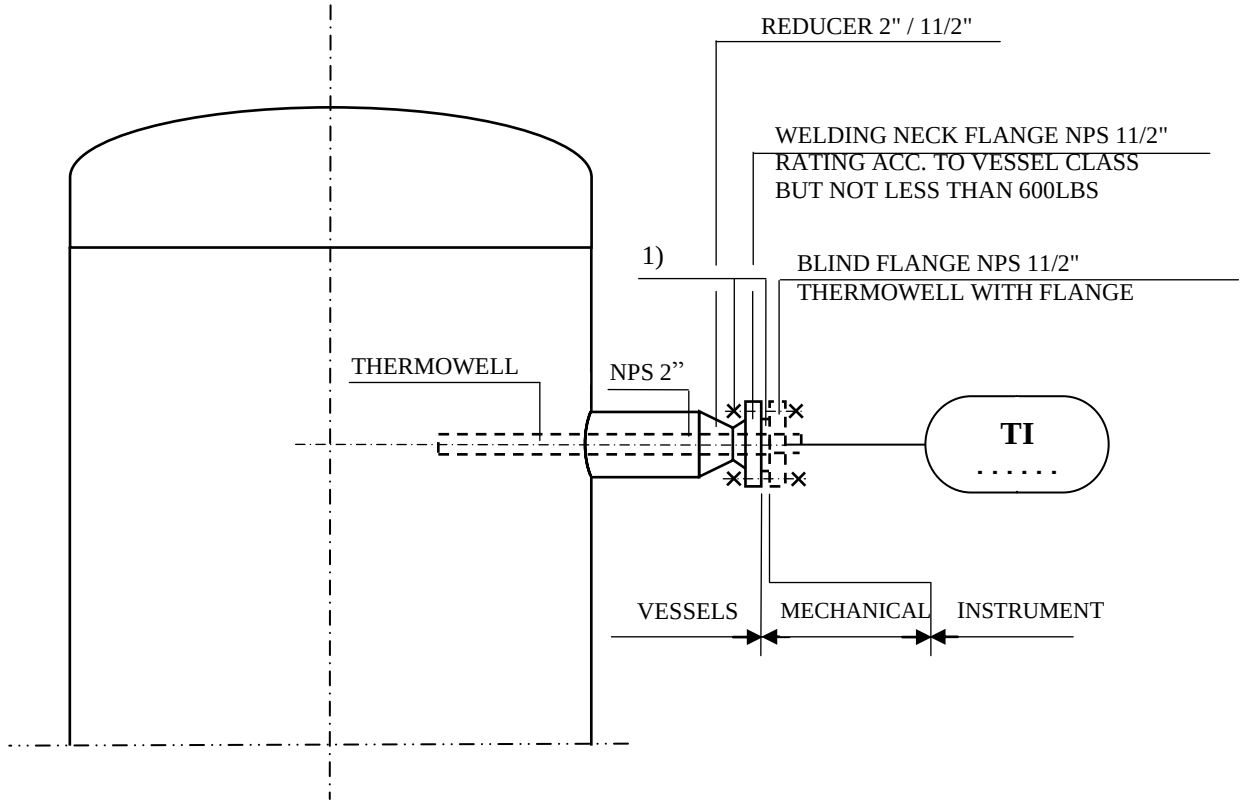


Notes:

1) - Bolts, nuts and gaskets are included in piping. All parts according to the pipe class and P&ID.

## 6. Typical location of thermowells

a) Location on line <NPS 4”

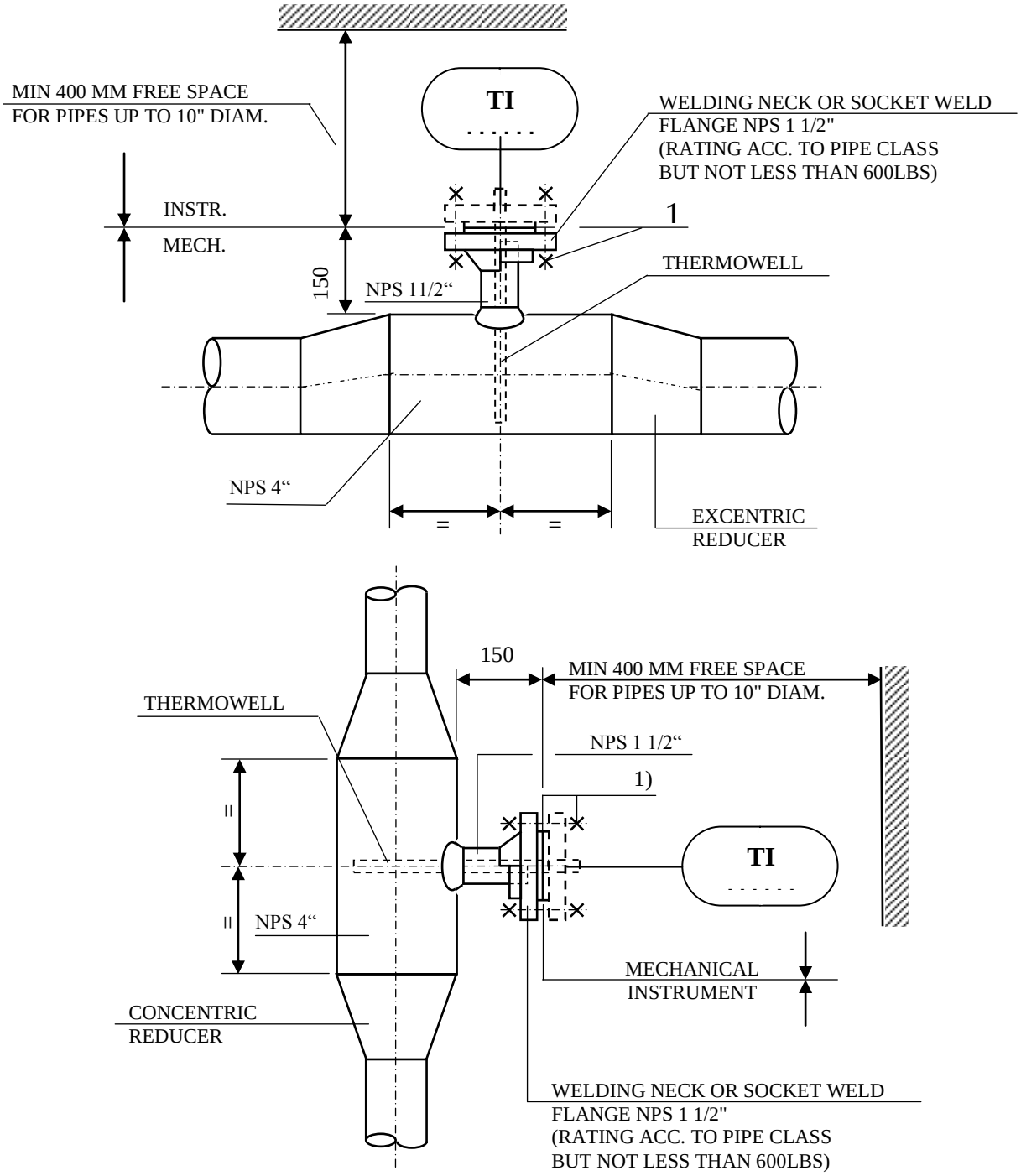


Notes:

1) - Bolts, nuts and gaskets are included in piping. All parts according to the pipe class and P&ID.

b) Location on line >=NPS 4”

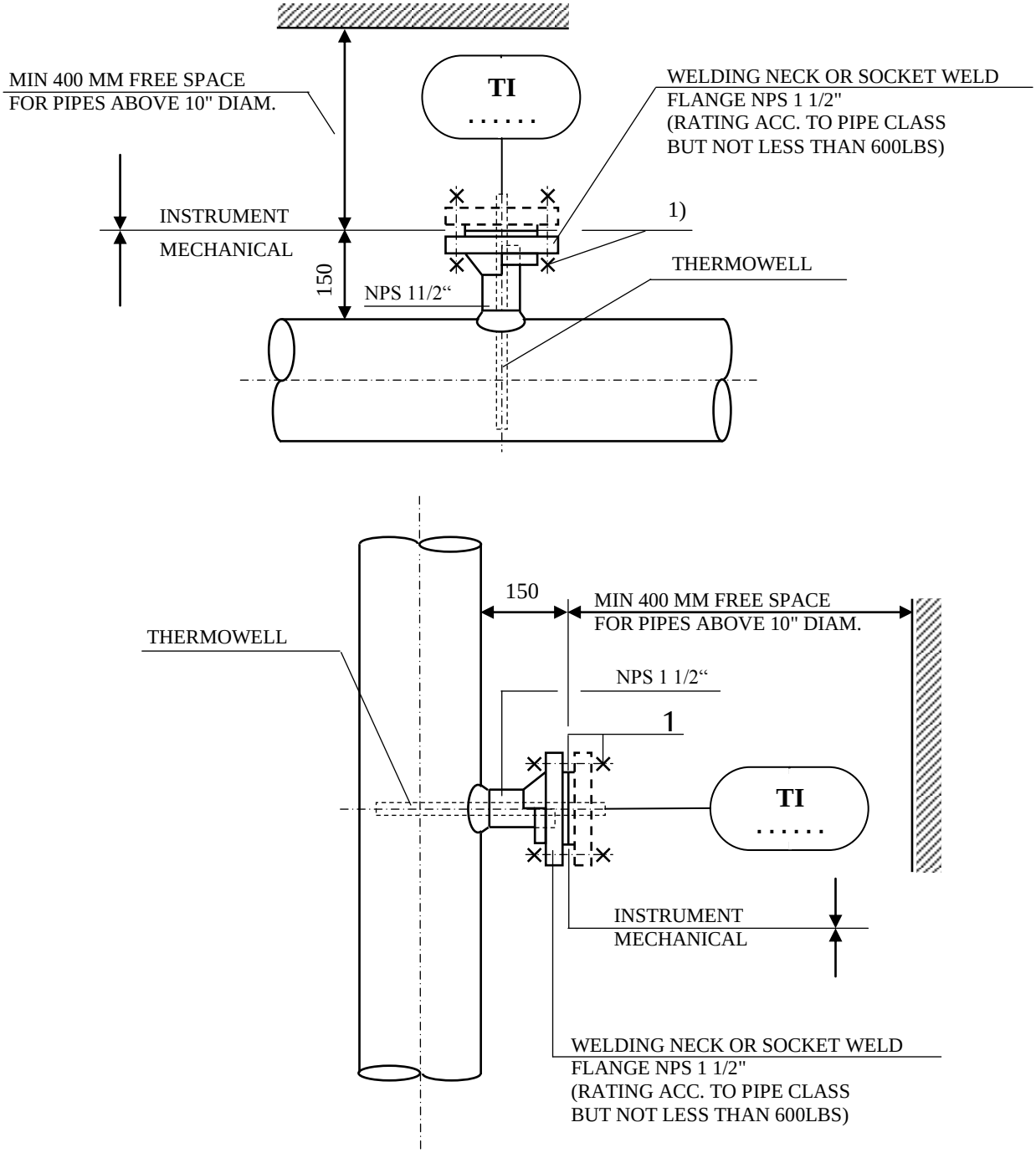


Notes:

1) - Bolts, nuts and gaskets are included in piping. All parts according to the pipe class and P&ID.

**Enclosure to be considered together with Specification No. 1010 – Interdisciplinary battery limits**

**Level measurement of medium for vessels**

## 1. Displacer type measurement

### 1.1, Level transmitter installation directly on vessel

#### 1.1.1 External displacer type level transmitter

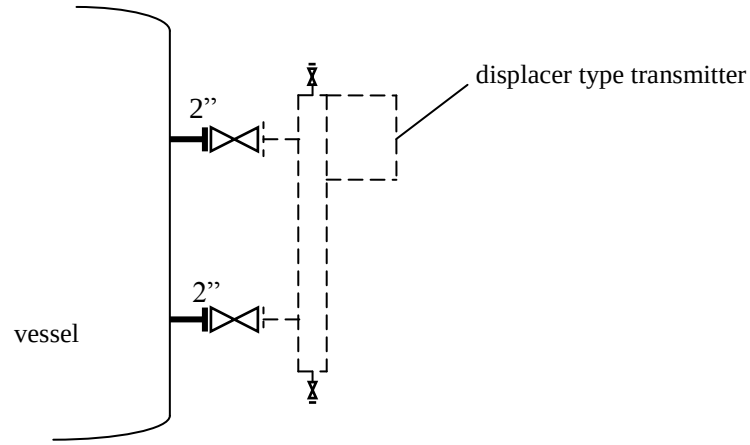


**Note:**
Flanges and valves acc. to pipe class

### 1.2 Internal displacer type level transmitter

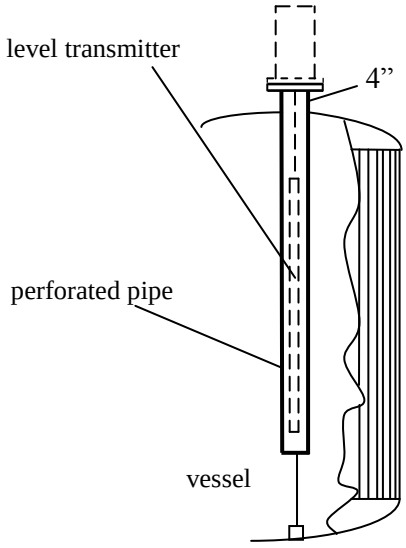


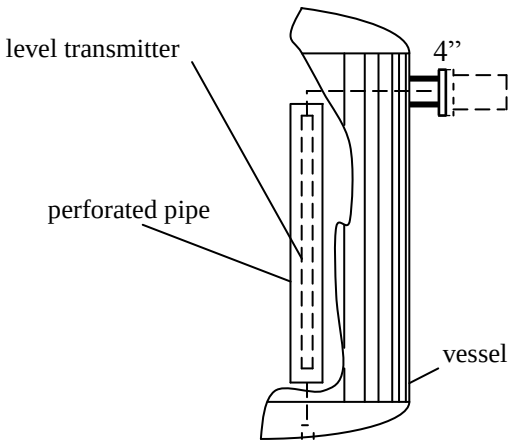

**2. Level measurement with use of level gauge or level switch with external displacer chamber - installation directly on vessel**

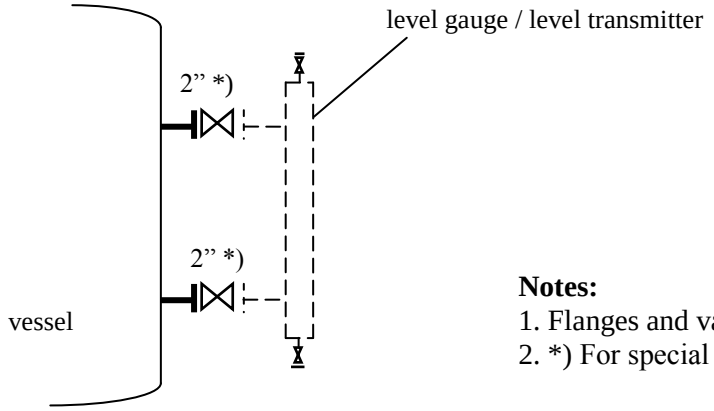


**Notes:**
1. Flanges and valves acc. to pipe class
2. *) For special executions 1"

**3. Level measurement with use of level gauge and displacer type transmitter - location on standpipe (small piping)**

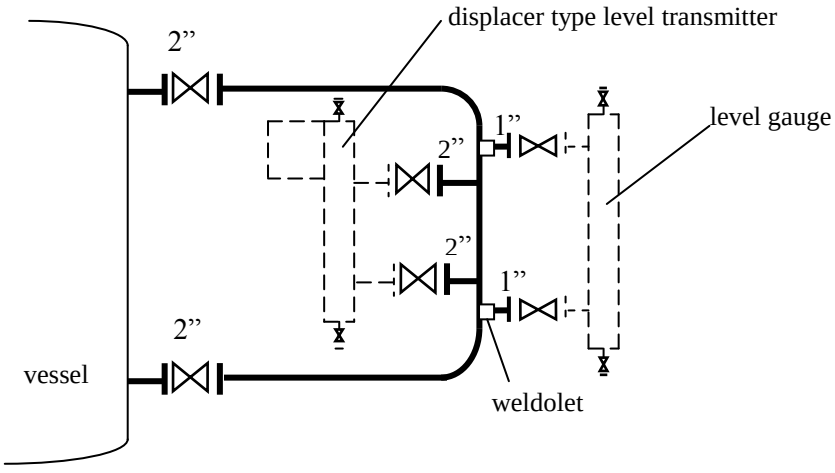


**Notes:**
1. Flanges and valves acc. to pipe class
2. For NPS <2" using valves with but weld ends is allowable.

## 4. Level measurement with use of pressure differential method

### 4.1 Without seal diaphragm

### 4,1,1 Directly on vessel

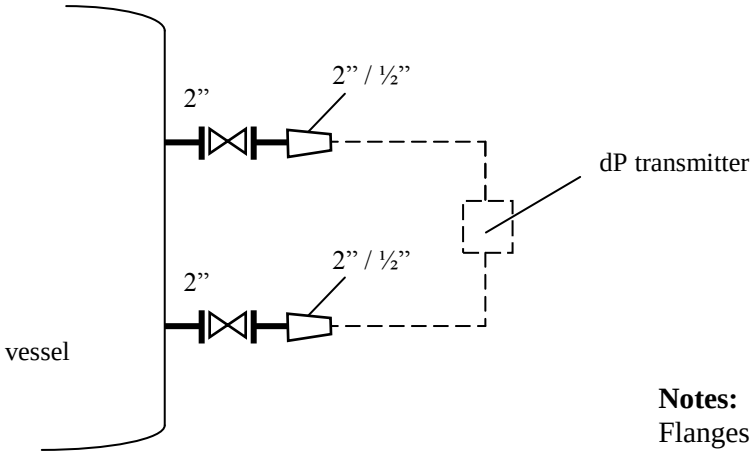


**Notes:**
Flanges and valves acc. to pipe class

### 4.1.2 On standpipe (small piping)

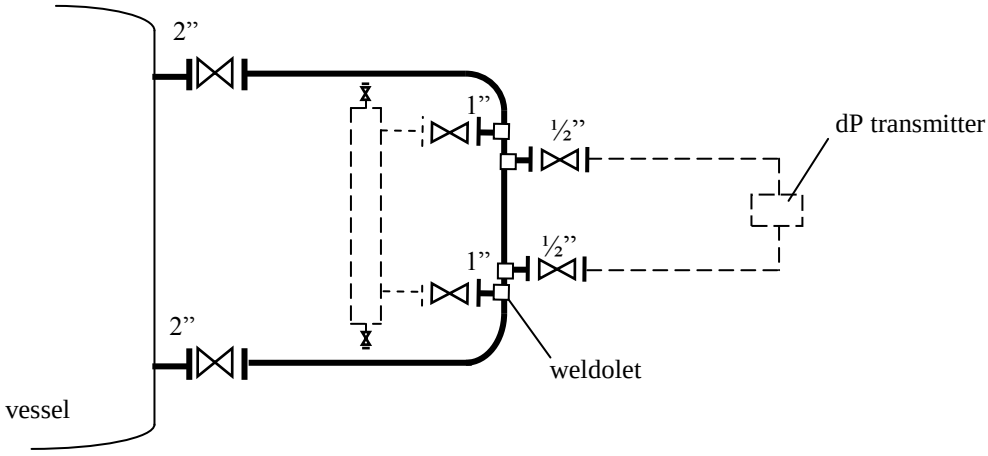


**Notes:**
1. Flanges and valves acc. to pipe class
2. For NPS <2” using valves with but weld ends is allowable

### 4.2 With seal diaphragm

#### 4.2.1 Directly on vessel

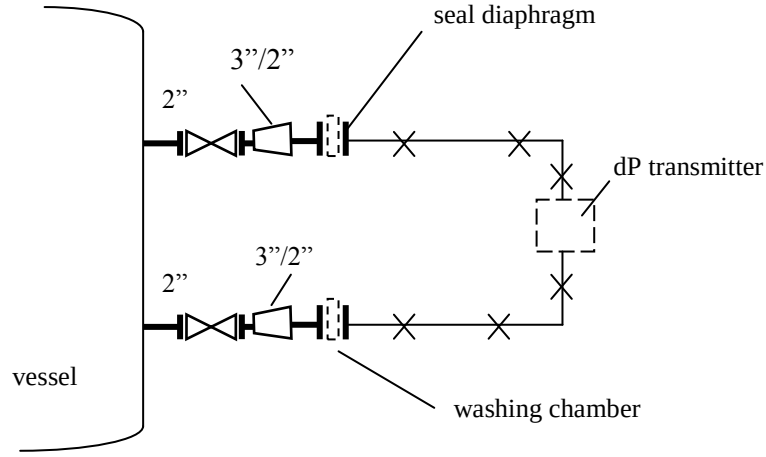


**Note:**
Flanges and valves acc. to pipe class

#### 4.2.2 On standpipe (small piping)

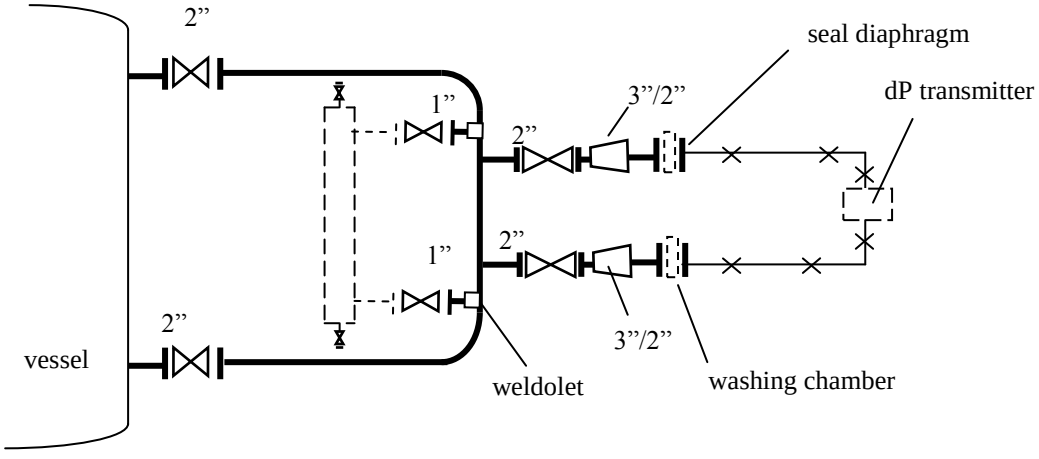


**Notes:**
1. Flanges and valves acc. to pipe class
2. For NPS <2" using valves with but weld ends is allowable

## 5. Level measurement with use of other methods

Individual solutions acc. to supplier requirements shall be used.

## 6. Level measurement of medium in storage tanks

### 6.1 Level measurement with use of rod radar (rope)

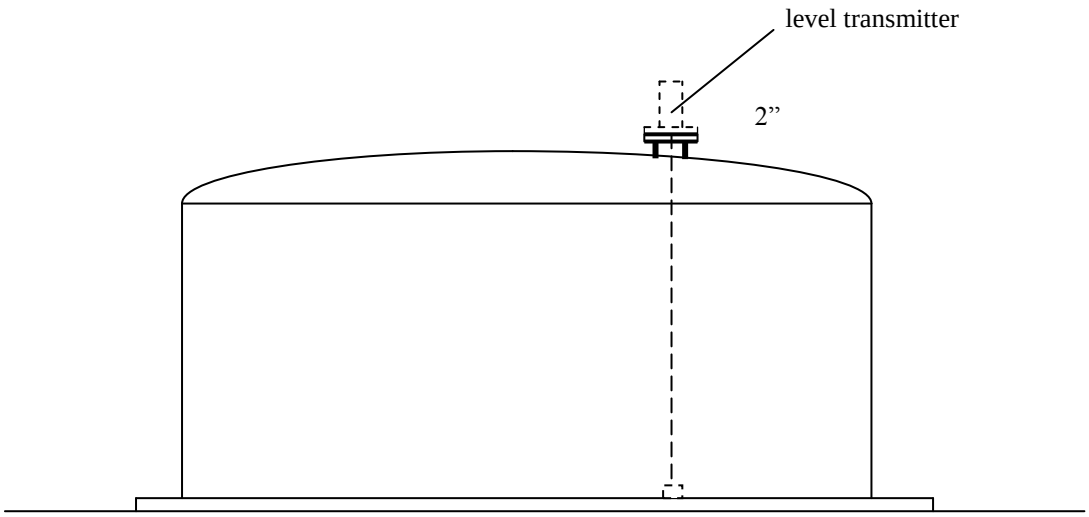


### 6.2 Level measurement with use of radar with antenna

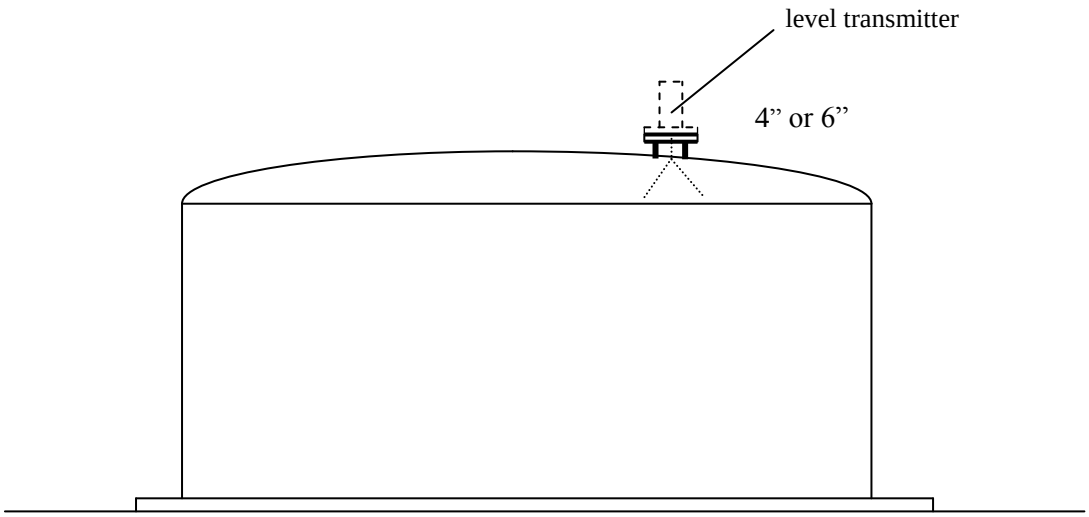

**6.3 Level measurement with use of radar with antenna in spherical vessels**

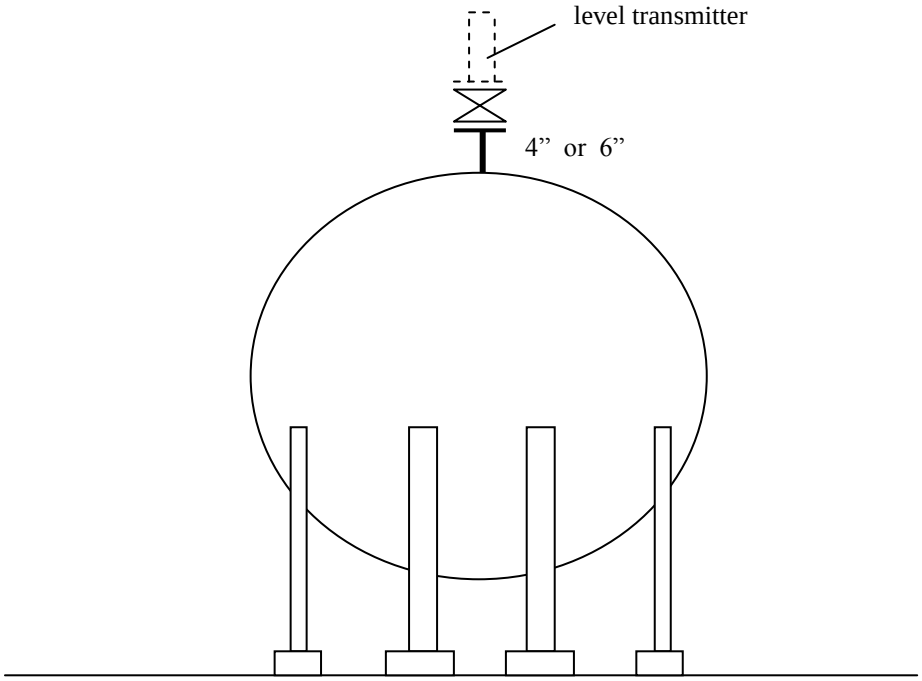

| Grupa LOTOS S.A. | **ENCLOSURE No. 25** | Spec. No. 2020 |
|---|---|---|
| | **Installation of Flow Measurement Instruments** | |

**Enclosure to be considered together with Specification No. 1010 – Interdisciplinary battery limits**

**1. Flow measurement with use of orifices**

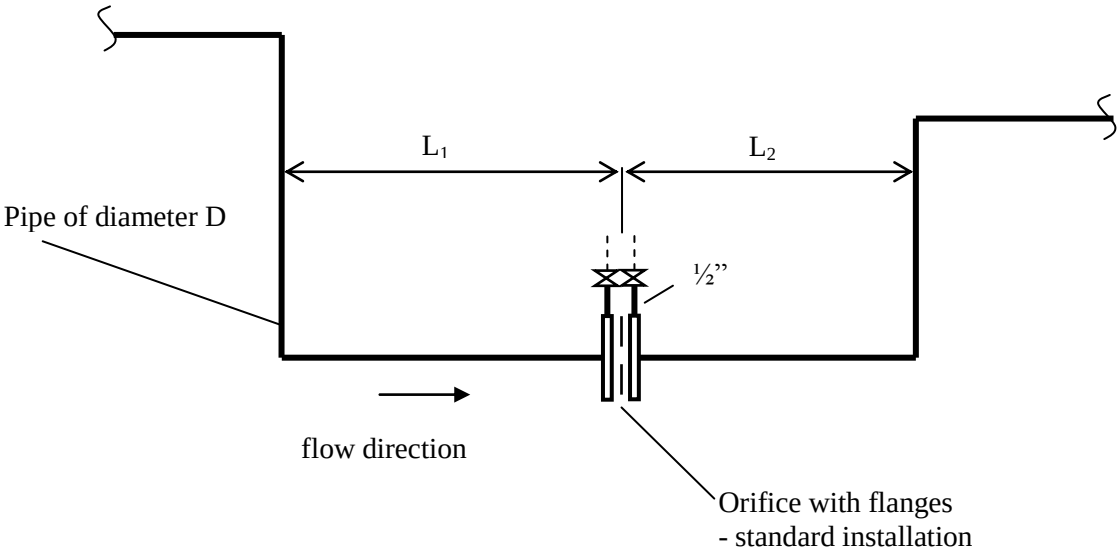


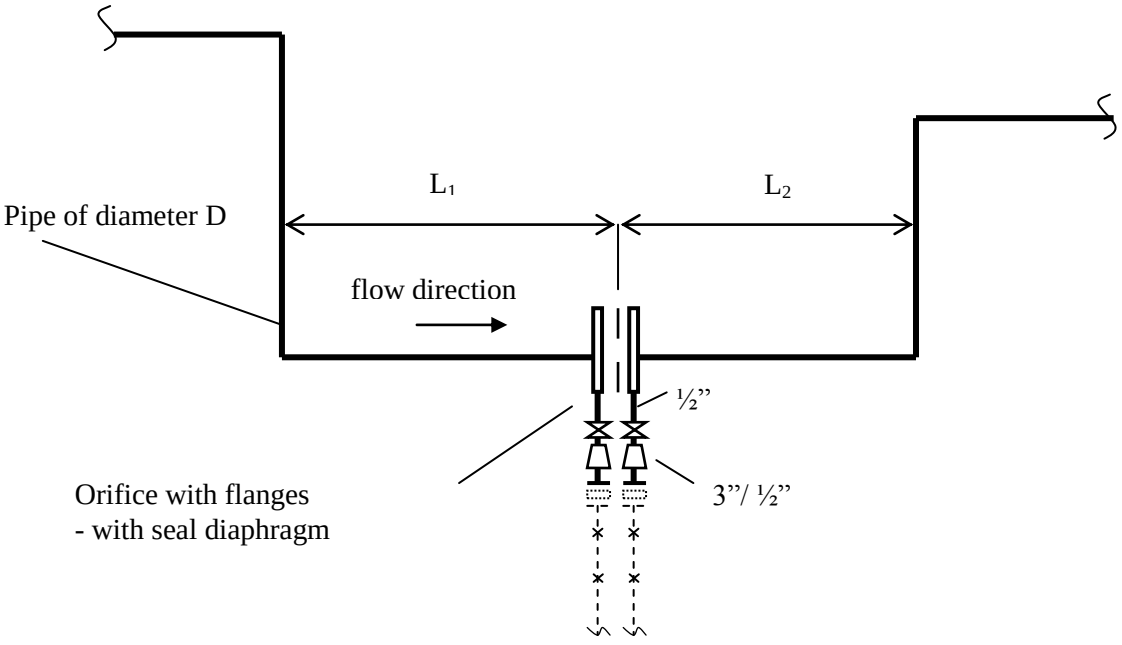


**Notes:**

1. Flanges for orifices (min 300 lb)
2. Required minimum straight lengths of $L_1$, $L_2$ – acc. to Specification No. 3020

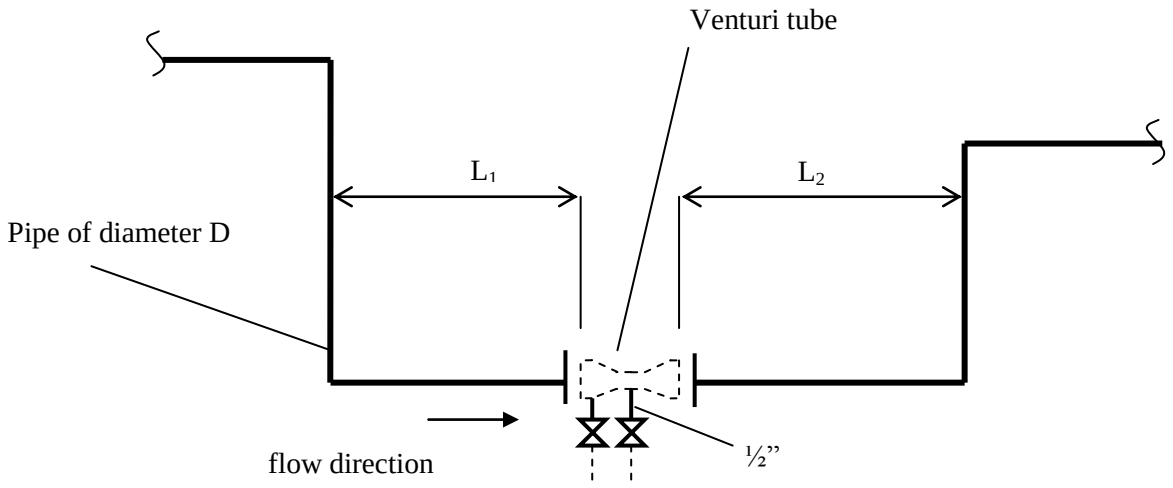


Required minimum straight lengths of $L_1$, $L_2$ – acc. to Specification No. 3020

## 2. Flow measurement with use of flowmeters

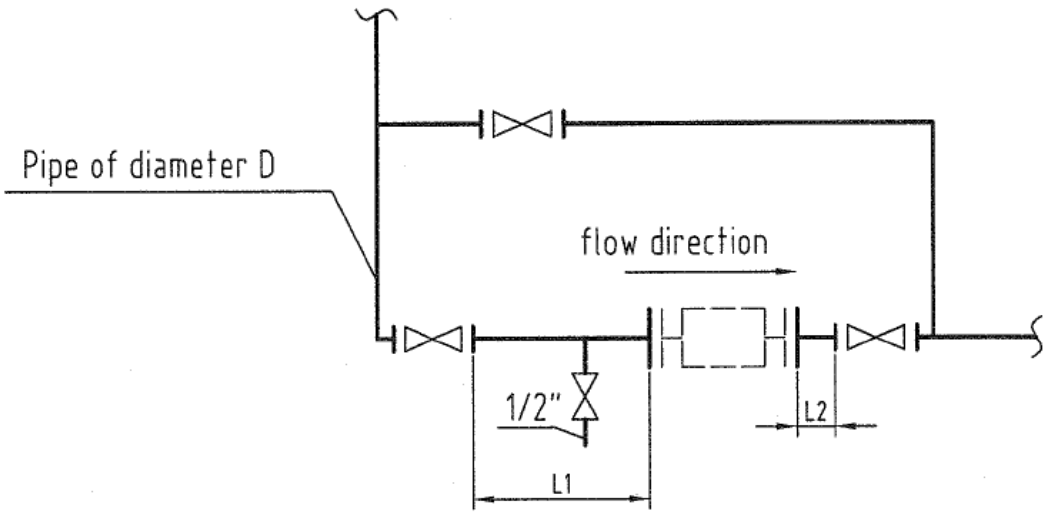


Required minimum straight lengths of $L_1$ i $L_2$ as below:

- for magnetic flowmeters, where diameter of pipe equals diameter of flowmeter $L_1$=5D, $L_2$=2D
- for VORTEX type flowmeters L1=15D÷ 50D, L2=5D
- for ultrasonic flowmeters $L_1$=10D, $L_2$=0
- there are no special requirements for mass flowmeters

Restriction orifices (reducers) are used on pipelines to limit pressure or flow.

The following types of restriction orifices can be distinguished:

- Single stage restriction orifices, installed between standard flanges appropriate for the class of the pipeline.

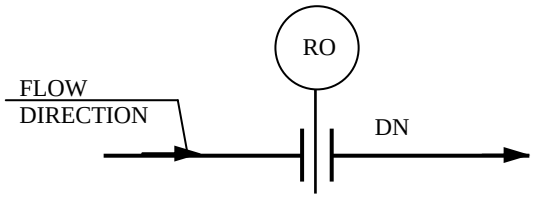


- Multi-stage restriction orifices connected with one another and with the pipeline by means of standard flanges appropriate for the class of the pipeline.

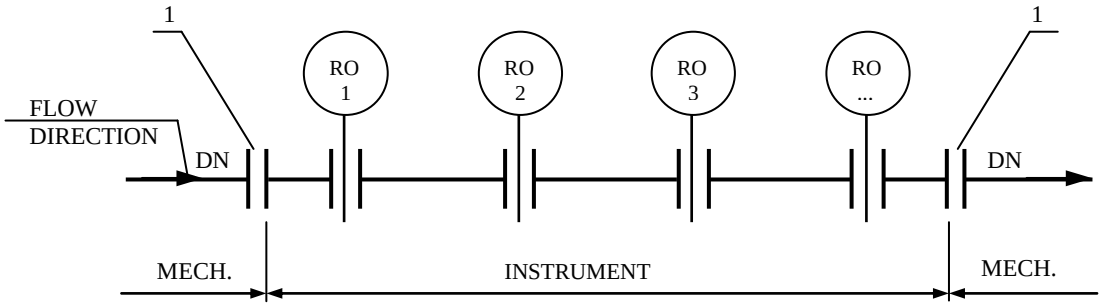


1) bolts, nuts and washers at the meeting point of two disciplines belong to the mechanical discipline

| Grupa LOTOS S.A. | **ENCLOSURE No. 27** | Spec. No. 2020 |
|---|---|---|
| | **Connections for corrosion-metering probes and sampling taps** | |

## 1. Connections for corrosion-metering probes

Connections for corrosion-metering probes are located on pipelines horizontally or vertically from above. Detailed location of corrosion-metering probes on pipelines establishes process engineer.

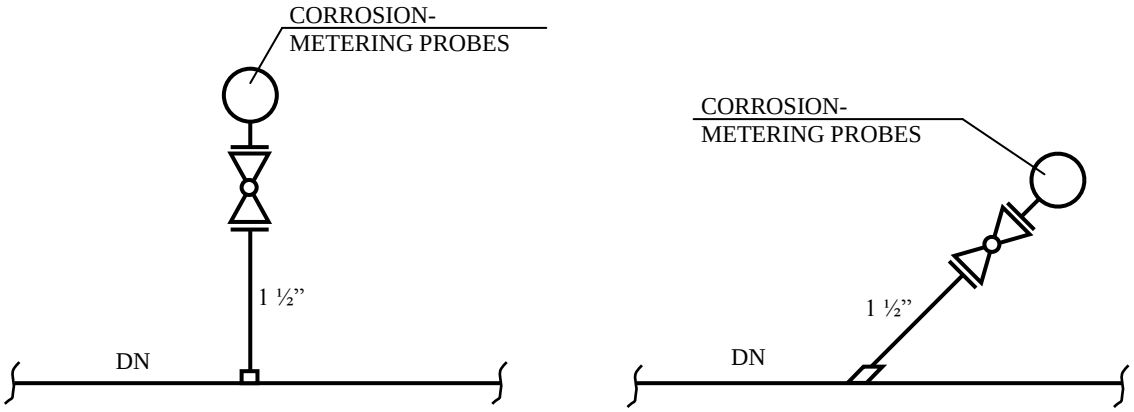


## 2. Connections for corrosion-metering probes with a sluice-type seal

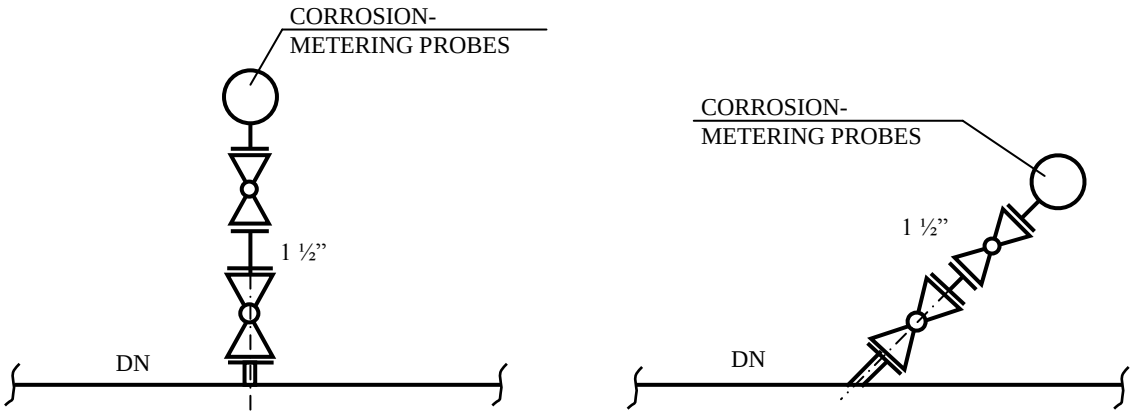

### 3. Sampling taps (with a sluice-type seal)

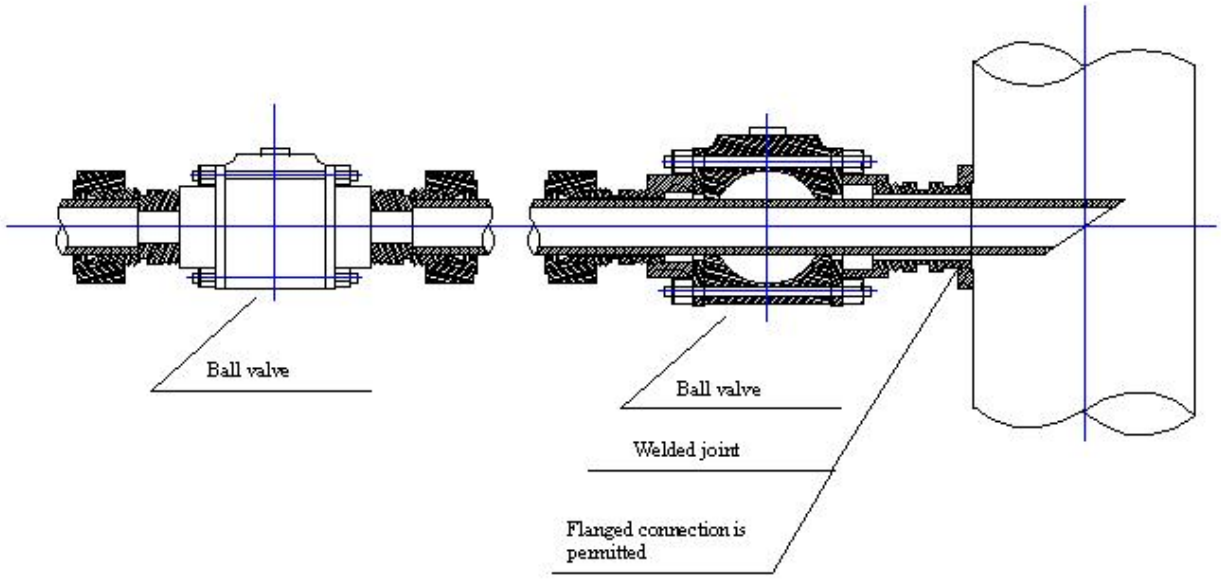


Hermetic sample points used to take sample for laboratory analysis are described at 3530 standard.
Additional information about analysers is provided at 3510 standard.

**1. Typical connection**

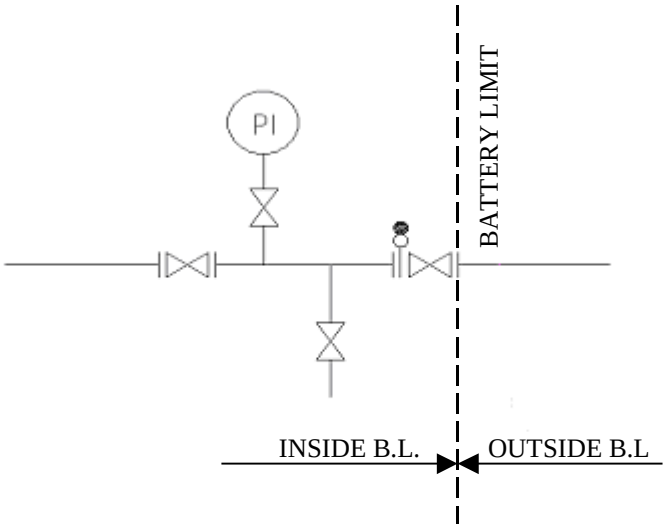


**2. Connection which should be applied in some justified cases**

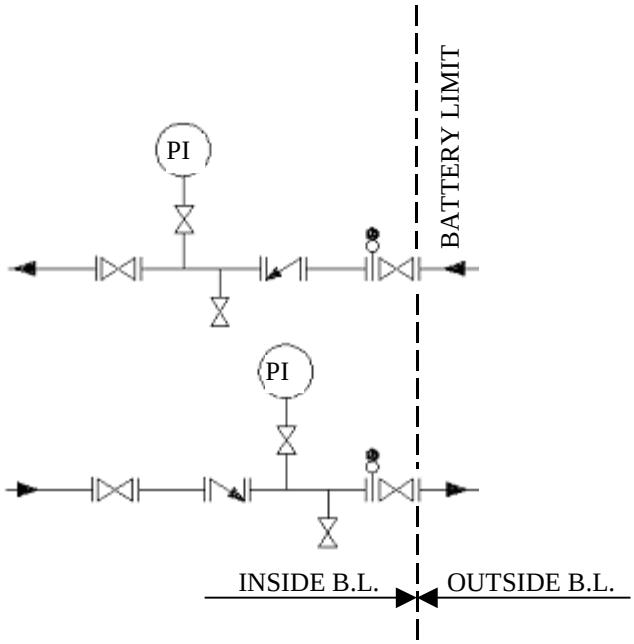

**3. Typical arrangement of cooling water, service water and potable water BL connection**:

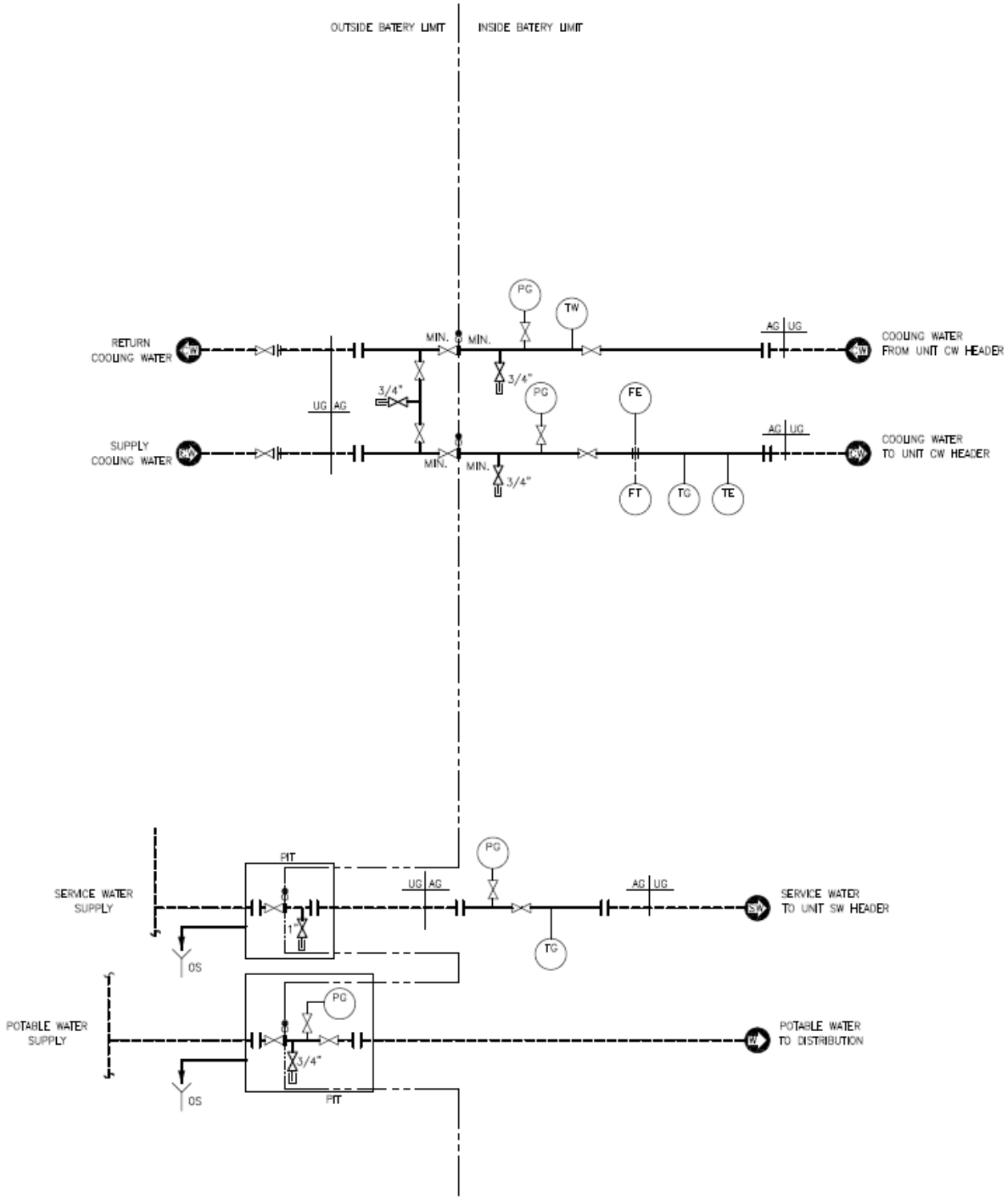

| Grupa LOTOS S.A. | **ENCLOSURE No. 29** | Spec. No. 2020 |
|---|---|---|
| | **Fixed Utility Connection to Piping or Equipment** | |

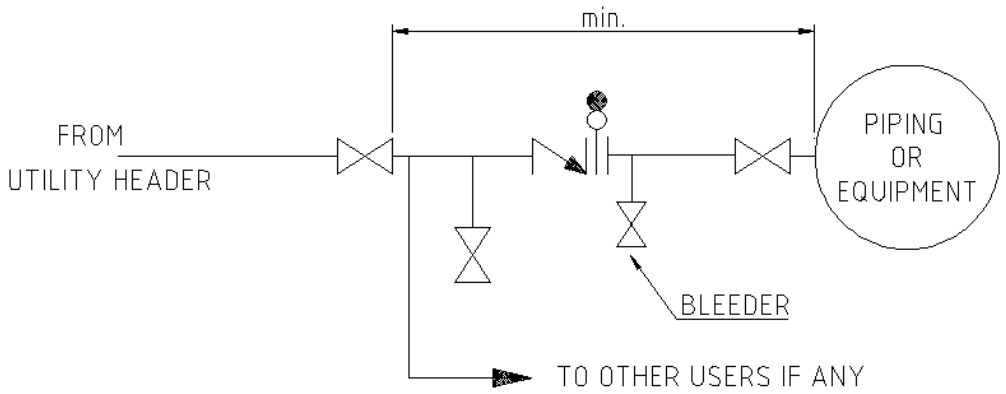

| Grupa LOTOS S.A. | **ENCLOSURE No. 30** | Spec. No. |
|---|---|---|
| | **Cooling Water Supply Connection** | 2020 |

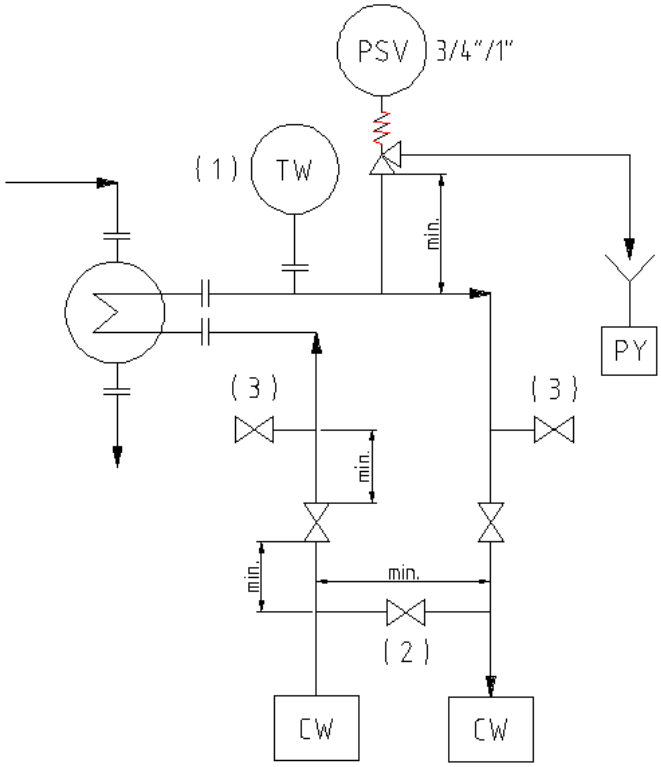


NOTES:

1 Unless otherwise shown o P&ID.

2 The dimensions of by-pass line are the following:

- 3/4" – for lines 3" and smaller
- 1" – for lines 4" to 8"
- 11/2" – for lines 10" to 20"
- 2" – for lines larger than 20"

1" of insulation shall be provided around the circulation by-pass, from it up to the drain valves, including the block valves.

3 All lines water service must be drainable in sewer at low point.